| Engineering data (WIN 739) | | |
|---|---|---|
| DC bus voltage | 320 | V DC |
| Nominal AC voltage | 220 | V AC (rms) |
| Rated voltage | 193 | V AC (rms) |
| Rated power | 942 | W |
| Rated speed | 3000 | rpm |
| Rated torque | 3.00 | Nm |
| Rated current | 3.47 | A (rms) |
| Peak torque | 10.5 | Nm |
| Peak current | 12.3 | A (rms) |
| Stall torque | 3.5 | Nm |
| Stall current | 3.41 | A (rms) |
| No load speed | 3540 | rpm |
| EMF constant ±10% | 62 | V AC (rms) / 1000rpm |
| Theoretical torque constant ±10% | 1.03 | Nm / A (rms) |
| Torque constant ±10% @ rated load | 0.86 | Nm / A (rms) |
| Number of poles | 10 | |
| Electrical time constant | 2.86 | ms |
| Winding terminal resistance | 4.27 | Ω |
| Rotary field terminal inductance | 12.2 | mH |

| Customs info | |
|---|---|
| HS Code | 85015220 |

| Mechanical data (setting 46) | | |
|---|---|---|
| Max mechanical speed | 12000 | rpm |
| Mech. time constant | 0.73 | ms |
| Thermal time constant | 27 | min |
| Rotor inertia | 1.04 | kgcm² |
| Protection | IP64 | |
| Color | RAL 9005 | |
| Cooling | Convection | |
| Motor-only mass | 2.9 | kg |
| Max. axial force 20kh | 68 | N |
| Max. radial force 20kh* | 356 | N |
| Max. axial force 100kh | 40 | N |
| Max. radial force 100kh* | 208 | N |

** Defined for point of action at ½ output shaft length*

| Sensors | |
|---|---|
| Temperature | PT1000 {PT1000} |
| Feedback | SKM36 (Hiperface) multi-turn, 128 sin/cos+12bits |

Torque / speed curve

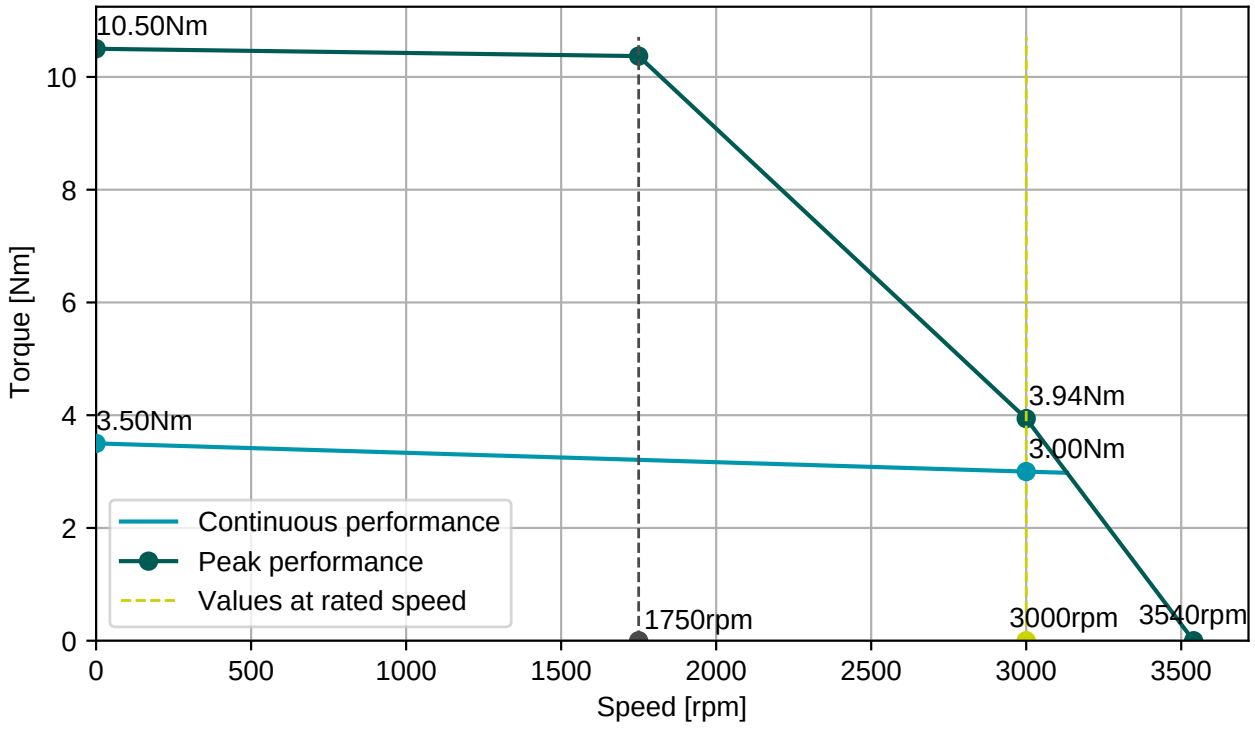


**BGC110N00001216000**
M23, 8 poles, rotary

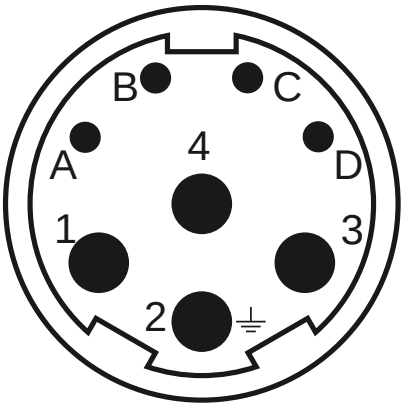


**AGC113N00001215000**
M23, 17 poles, rotary

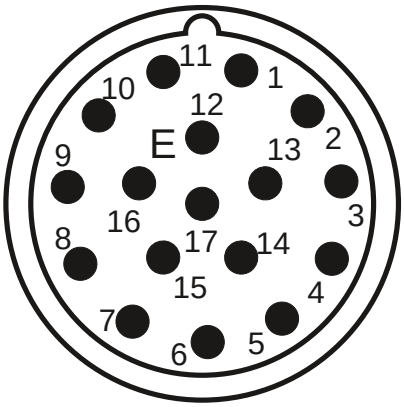


| Connector 1 (9) | |
|---|---|
| **1** | U |
| **4** | V |
| **3** | W |
| **2** | PE |
| **A** | Brake+ |
| **B** | Brake- |
| **C** | |
| **D** | |

| Connector 2 (130) | |
|---|---|
| **1/9** | SIN/REFSIN |
| **3/11** | COS/REFCOS |
| **5/13** | DATA/DATA- |
| **4/2** | Us/GND |
| **14/7** | Therm |

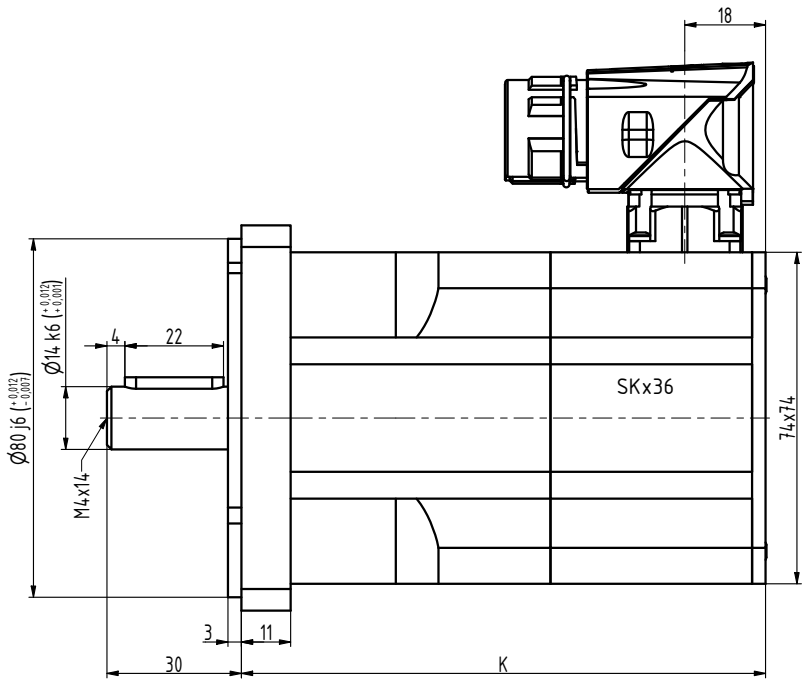


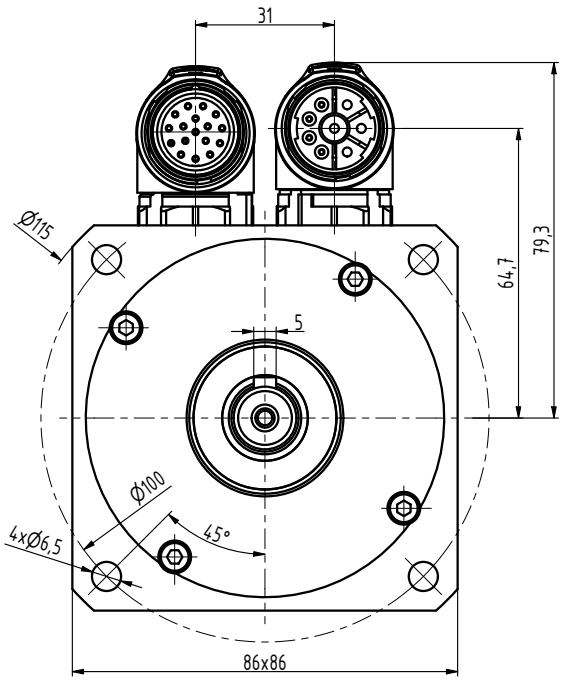


| TYP | K |
|---|---|
| N3-0115 | 99 |
| N3-0205 | 117 |
| N3-0280 | 135 |
| N3-0350 | 153 |
| N3-0420 | 171 |
| N3-0480 | 189 |

| INDEX | ZMĚNA | DATUM | PODPIS |
|---|---|---|---|
| | | | |

| | | | | | |
|---|---|---|---|---|---|
| ZN.MAT. | | | T.O. | HMOTNOST kg | MĚŘ. |
| ROZM.-POLOT. | | | | | |
| POM. ZAŘ. | | | | ČSN | TŘ.Č. |
| VYPR. Ošlejšek | NORM.REF. | | | POZN. | Č. KUSOVNÍKU |
| PŘEKR. Ošlejšek 30.05.2021 | | | | | |
| TECHNOL. | SCHVÁLIL Ošlejšek | 25.02.2010 | | STARÝ V. | Č.V. |

NÁZEV
Motor N3

N3119 02 P Z_S4_S1

Listů List