Engineering data (WIN 707)		
DC bus voltage	560	V DC
Nominal AC voltage	380	V AC (rms)
Rated voltage	278	V AC (rms)
Rated power	942	W
Rated speed	3000	rpm
Rated torque	3.00	Nm
Rated current	2.42	A (rms)
Peak torque	10.5	Nm
Peak current	10.9	A (rms)
Stall torque	3.5	Nm
Stall current	2.38	A (rms)
No load speed	4260	rpm
EMF constant ±10%	89	V AC (rms) / 1000rpm
Theoretical torque constant ±10%	1.47	Nm / A (rms)
Torque constant ±10% @ rated load	1.24	Nm / A (rms)
Number of poles	10	
Electrical time constant	2.87	ms
Winding terminal resistance	8.89	Ω
Rotary field terminal inductance	25.5	mH

Customs info	
HS Code	85015220

Mechanical data (setting 46)		
Max mechanical speed	12000	rpm
Mech. time constant	0.74	ms
Thermal time constant	27	min
Rotor inertia	1.04	kgcm²
Protection	IP64	
Color	RAL 9005	
Cooling	Convection	
Motor-only mass	3.4	kg
Max. axial force 20kh	68	N
Max. radial force 20kh*	360	N
Max. axial force 100kh	40	N
Max. radial force 100kh*	211	N

** Defined for point of action at ½ output shaft length*

Sensors	
Temperature	PT1000 {PT1000}
Feedback	SKM36 (Hiperface) multi-turn, 128 sin/cos+12bits

Brake		
Braking torque	4.50	Nm
Voltage	24	V DC
Power @20°C	12.0	W
Current @20°C	0.50	A
Inertia	0.20	kgcm²
Mass	0.47	kg

Torque / speed curve

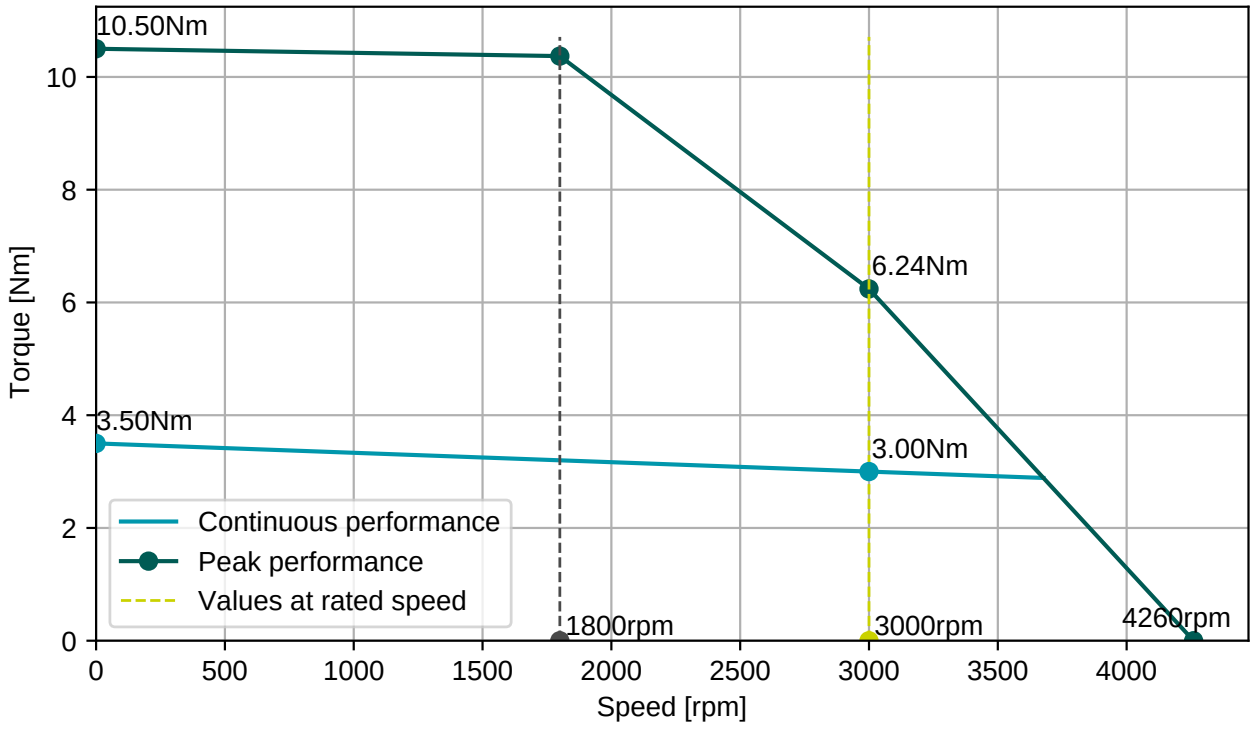

BGC110N00001216000
M23, 8 poles, rotary

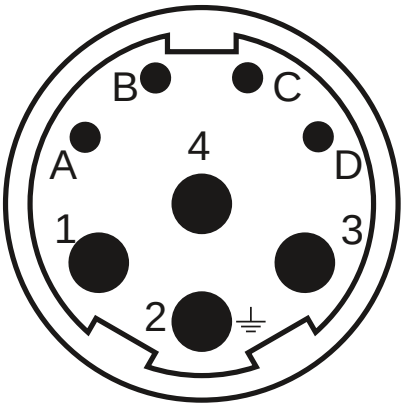

AGC113N00001215000
M23, 17 poles, rotary

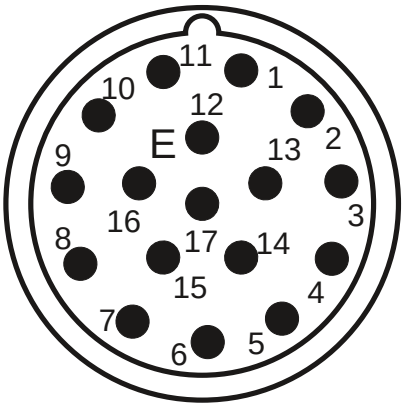

Connector 1 (9)	
1	U
4	V
3	W
2	PE
A	Brake+
B	Brake-
C	
D	

Connector 2 (130)	
1/9	SIN/REFSIN
3/11	COS/REFCOS
5/13	DATA/DATA-
4/2	Us/GND
14/7	Therm

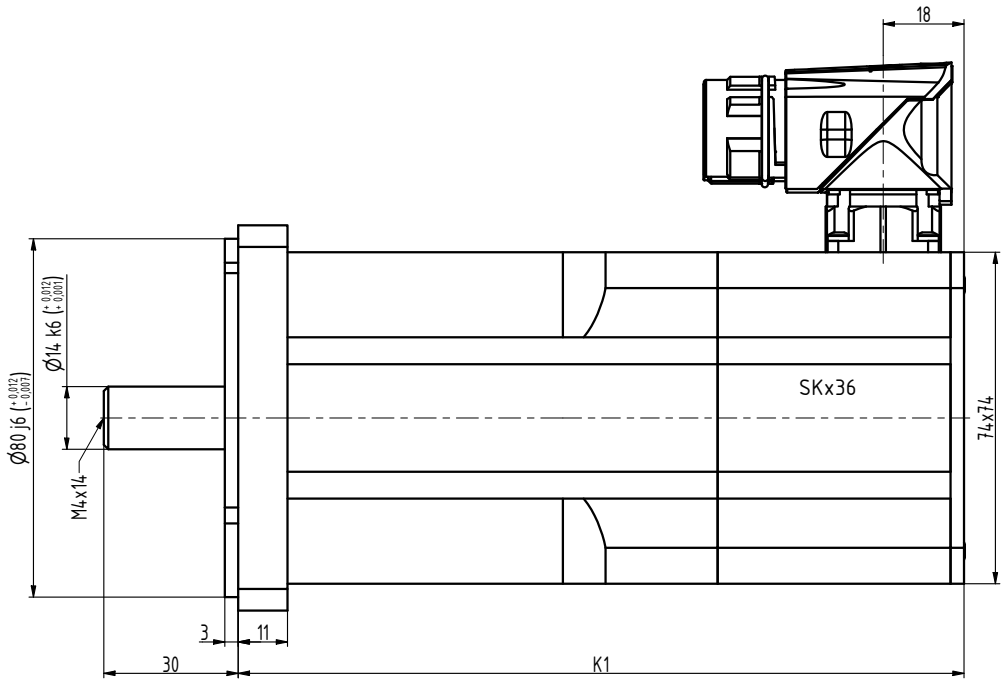

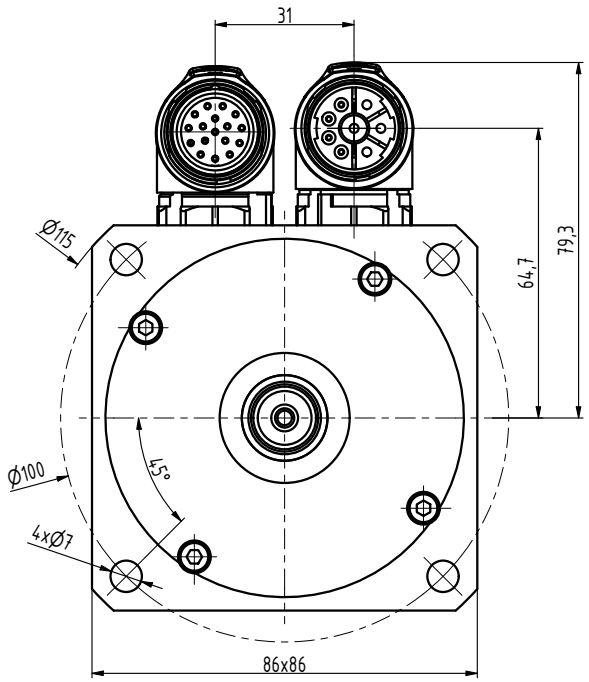

TYP	K1
N3-0115	144
N3-0205	162
N3-0280	180
N3-0350	198
N3-0420	216
N3-0480	234

INDEX	ZMĚNA	DATUM	PODPIS

ZN.MAT.			T.O.	HMOTNOST kg	MĚŘ.
ROZM.-POLOT.					
POM. ZAŘ.				ČSN	TŘ.Č.
VYPR. Ošlejšek	NORM.REF.			POZN.	Č. KUSOVNÍKU
PŘEKR. Ošlejšek 30.05.2021					
TECHNOL.	SCHVÁLIL Ošlejšek	11.11.2019		STARÝ V.	Č.V.

NÁZEV
Motor N3

N3119 02 B Z_S4_S1

Listů List