Engineering motordata (WIN 1262)		
DC bus voltage	560	V DC
Nominal AC voltage	380	V AC (rms)
Rated voltage	252	V AC (rms)
Rated power	1.0	kW
Rated speed	3000	rpm
Rated torque	3.20	Nm
Rated current	2.71	A (rms)
Peak torque	11.1	Nm
Peak current	12.1	A (rms)
Stall torque	4.05	Nm
Stall current	3.02	A (rms)
No load speed	4680	rpm
EMF constant ±10%	81	V AC (rms) / 1000rpm
Theoretical torque constant ±10%	1.34	Nm / A (rms)
Torque constant ±10% @ rated load	1.18	Nm / A (rms)
Number of poles	10	
Electrical time constant	5.08	ms
Winding terminal resistance	3.98	Ω
Rotary field terminal inductance	20.2	mH

Customs info	
HS Code	85015220

Mechanical motor data (setting 64)		
Max mechanical speed	9000	rpm
Mech. time constant	0.92	ms
Thermal time constant	37	min
Rotor inertia	2.4	kgcm²
Protection	IP64	
Color	RAL 9005	
Cooling	Convection	
Motor-only mass	6	kg

Sensors	
Temperature	PT1000 {PT1000}
Feedback	EKS36 (HDSL) single-turn, 17 bits

Gearbox engineering data		
Gear ratio	67	
Efficiency*	70	%
Torsional stiffness	22	Nm/arcmin
Rated output torque	130	Nm
Max output torque	325	Nm
Rated input speed	2000	rpm
Max input speed	4500	rpm
Operating temperature	<-25; 50>	°C
Max. backlash	< 0.5	arcmin
Service life	6000	h

** at rated speed & torque*

Lubrication	
Type	Standard
Lubricant	Mobil Gear SHC150

Gearbox mechanical data		
Max. radial force	9300	N
Max. axial force	13100	N
Output shaft design	Flange	
Mass	4.2	kg
Input inertia	0.16	kgcm²
Protection	IP64	

Actuator data		
Rated speed	30	rpm
Rated torque	130.00	Nm
Peak torque	325.00	Nm
EMF constant ±10%	5427.0	V AC (rms) / 1000rpm
Torque constant ±10% @ rated load	55.38	Nm / A (rms)
Total mass	10.20	kg
Output inertia	11491.8	kgcm²

Torque / speed curve

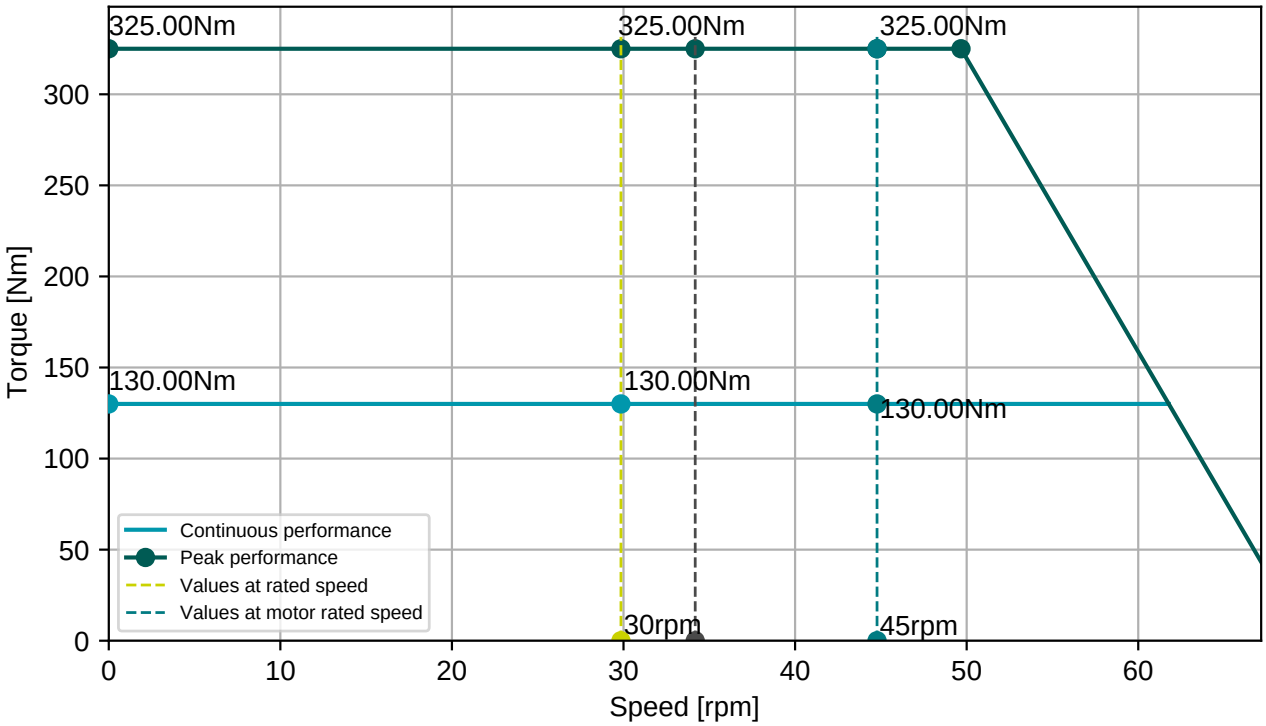

BGC110N00001216000

M23, 8 poles, rotary

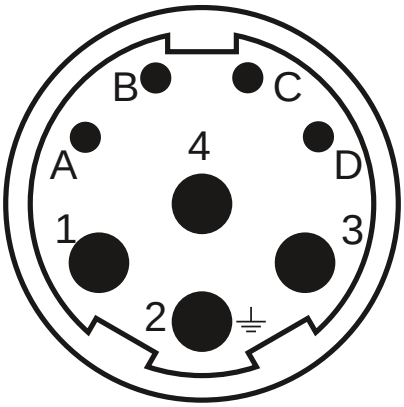

Connector 1 (297)	
1	U
4	V
3	W
2	PE
A	Brake+
B	Brake-
C	+Us/DSL+
D	GND/DSL-

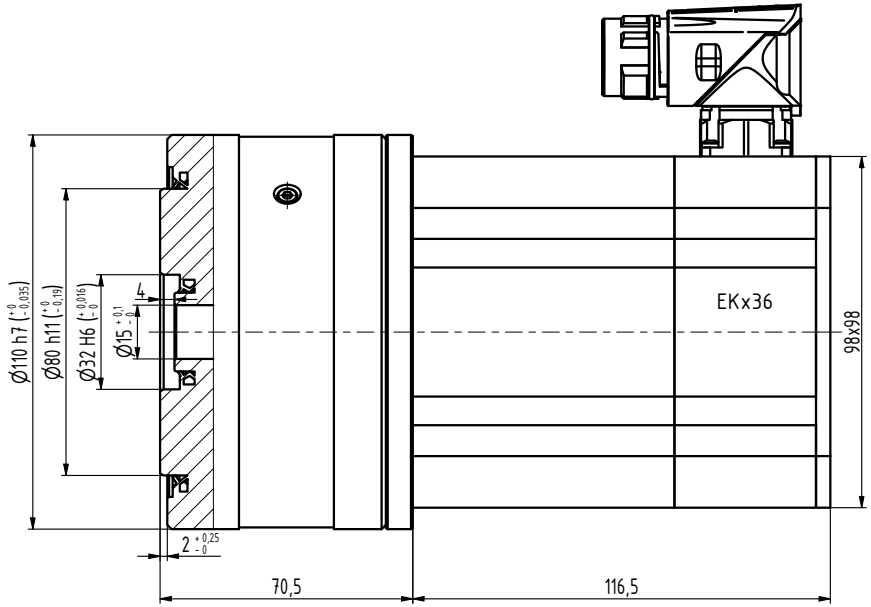

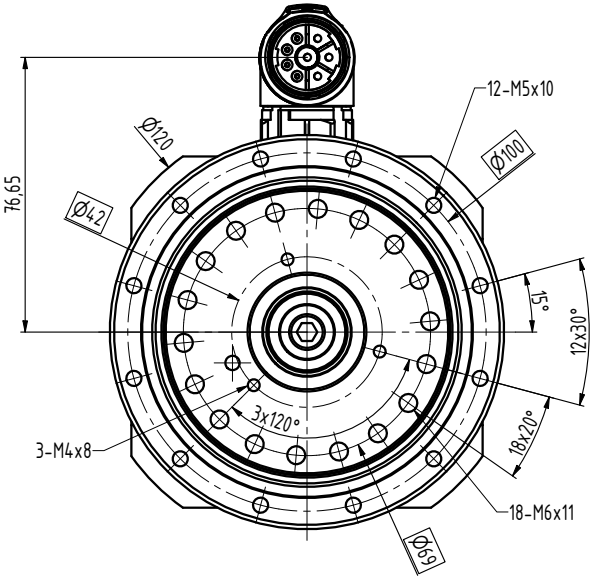

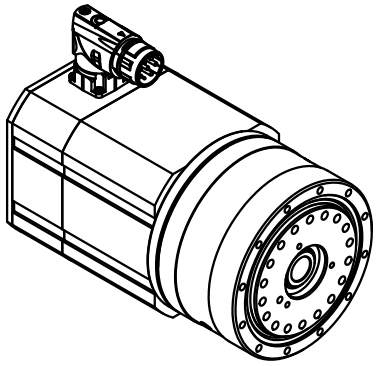

INDEX	ZMĚNA	DATUM	PODPIS		
ZN.MAT.		T.O.	HMOTNOST kg	MĚŘ.	
ROZM.-POLOT.					
POM. ZAŘ.			ČSN	TŘ.Č.	
VYPR. Ošlejšek	NORM.REF.		POZN.	Č. KUSOVNÍKU	
PŘEKR.					
TECHNOL.	SCHVÁLIL Ošlejšek	15.03.2023	STARÝ V.	Č.V.	
NÁZEV: Motor M4-0370 / C1Q130C			M4145 02 Z		
			Listů	List	