Engineering data (WIN 745)		
DC bus voltage	320	V DC
Nominal AC voltage	220	V AC (rms)
Rated voltage	172	V AC (rms)
Rated power	401	W
Rated speed	4500	rpm
Rated torque	0.85	Nm
Rated current	1.7	A (rms)
Peak torque	3.8	Nm
Peak current	8.4	A (rms)
Stall torque	0.95	Nm
Stall current	1.82	A (rms)
No load speed	6950	rpm
EMF constant ±10%	31.5	V AC (rms) / 1000rpm
Theoretical torque constant ±10%	0.52	Nm / A (rms)
Torque constant ±10% @ rated load	0.50	Nm / A (rms)
Number of poles	6	
Electrical time constant	1.46	ms
Winding terminal resistance	13.05	Ω
Rotary field terminal inductance	19	mH

Customs info	
HS Code	85015100

Mechanical data (setting 49)		
Max mechanical speed	12000	rpm
Mech. time constant	0.92	ms
Thermal time constant	18	min
Rotor inertia	0.11	kgcm²
Protection	IP64	
Color	RAL 9005	
Cooling	Convection	
Motor-only mass	1.7	kg
Max. axial force 20kh	44	N
Max. radial force 20kh*	230	N
Max. axial force 100kh	26	N
Max. radial force 100kh*	135	N

** Defined for point of action at ½ output shaft length*

Sensors	
Temperature	PT1000 {PT1000}
Feedback	SKS36 (Hiperface) single-turn, 128 sin/cos

Brake		
Braking torque	2.00	Nm
Voltage	24	V DC
Power @20°C	11.0	W
Current @20°C	0.46	A
Inertia	0.08	kgcm²
Mass	0.20	kg

Torque / speed curve

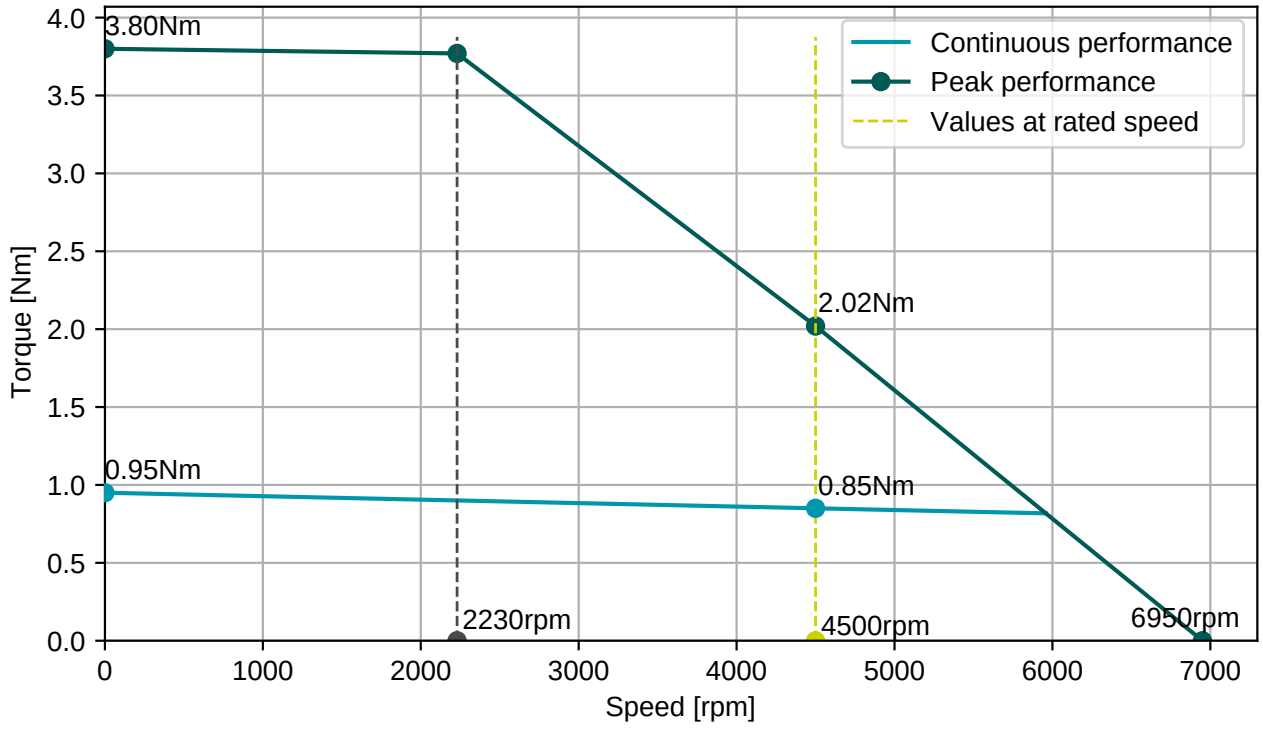

BGC110N00001216000
M23, 8 poles, rotary

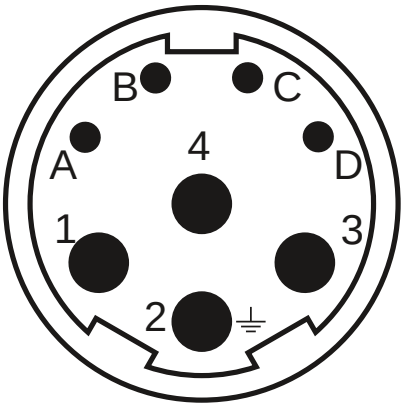

AGC113N00001215000
M23, 17 poles, rotary

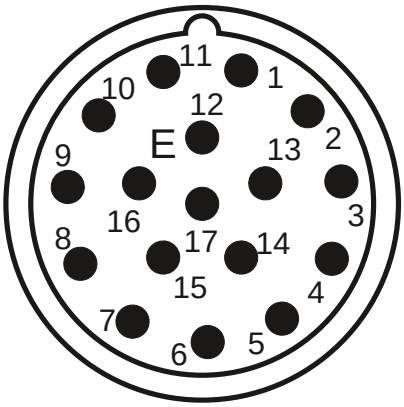

Connector 1 (9)	
1	U
4	V
3	W
2	PE
A	Brake+
B	Brake-
C	
D	

Connector 2 (130)	
1/9	SIN/REFSIN
3/11	COS/REFCOS
5/13	DATA/DATA-
4/2	Us/GND
14/7	Therm

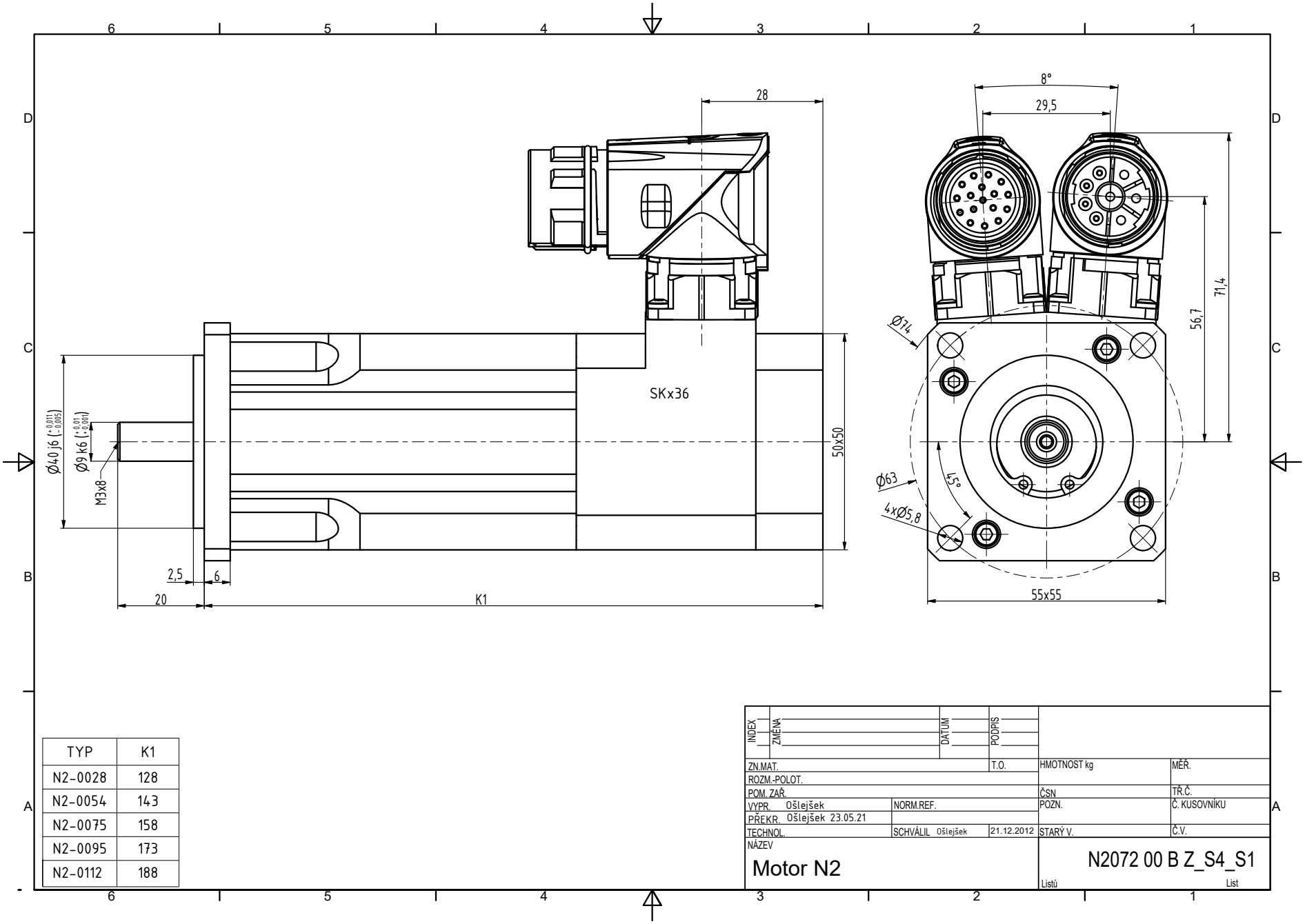

TYP	K1
N2-0028	128
N2-0054	143
N2-0075	158
N2-0095	173
N2-0112	188

INDEX	ZMĚNA	DATUM	PODPIS

ZN.MAT.			T.O.	HMOTNOST kg	MĚŘ.
ROZM.-POLOT.					
POM. ZAŘ.				ČSN	TŘ.Č.
VYPR. Ošlejšek	NORM.REF.			POZN.	Č. KUSOVNÍKU
PŘEKR. Ošlejšek 23.05.21					
TECHNOL.	SCHVÁLIL Ošlejšek	21.12.2012		STARÝ V.	Č.V.

NÁZEV

Motor N2

N2072 00 B Z_S4_S1

Listů List