Engineering data (WIN 795)		
DC bus voltage	36	V DC
Nominal AC voltage	25	V AC (rms)
Rated voltage	21	V AC (rms)
Rated power	188	W
Rated speed	2500	rpm
Rated torque	0.72	Nm
Rated current	7.8	A (rms)
Peak torque	2.73	Nm
Peak current	31.2	A (rms)
Stall torque	0.75	Nm
Stall current	7.7	A (rms)
No load speed	4200	rpm
EMF constant ±10%	5.9	V AC (rms) / 1000rpm
Theoretical torque constant ±10%	0.1	Nm / A (rms)
Torque constant ±10% @ rated load	0.1	Nm / A (rms)
Number of poles	6	
Electrical time constant	1.27	ms
Winding terminal resistance	0.7	Ω
Rotary field terminal inductance	0.89	mH

Customs info	
HS Code	85015100

Mechanical data (setting 49)		
Max mechanical speed	12000	rpm
Mech. time constant	1.15	ms
Thermal time constant	12	min
Rotor inertia	0.09	kgcm²
Protection	IP64	
Color	RAL 9005	
Cooling	Convection	
Motor-only mass	1.54	kg
Max. axial force 20kh	52	N
Max. radial force 20kh*	276	N
Max. axial force 100kh	31	N
Max. radial force 100kh*	161	N

** Defined for point of action at ½ output shaft length*

Sensors	
Temperature	PT1000 {PT1000}
Feedback	SKM36 (Hiperface) multi-turn, 128 sin/cos+12bits

Brake		
Braking torque	2.00	Nm
Voltage	24	V DC
Power @20°C	11.0	W
Current @20°C	0.46	A
Inertia	0.08	kgcm²
Mass	0.20	kg

Torque / speed curve

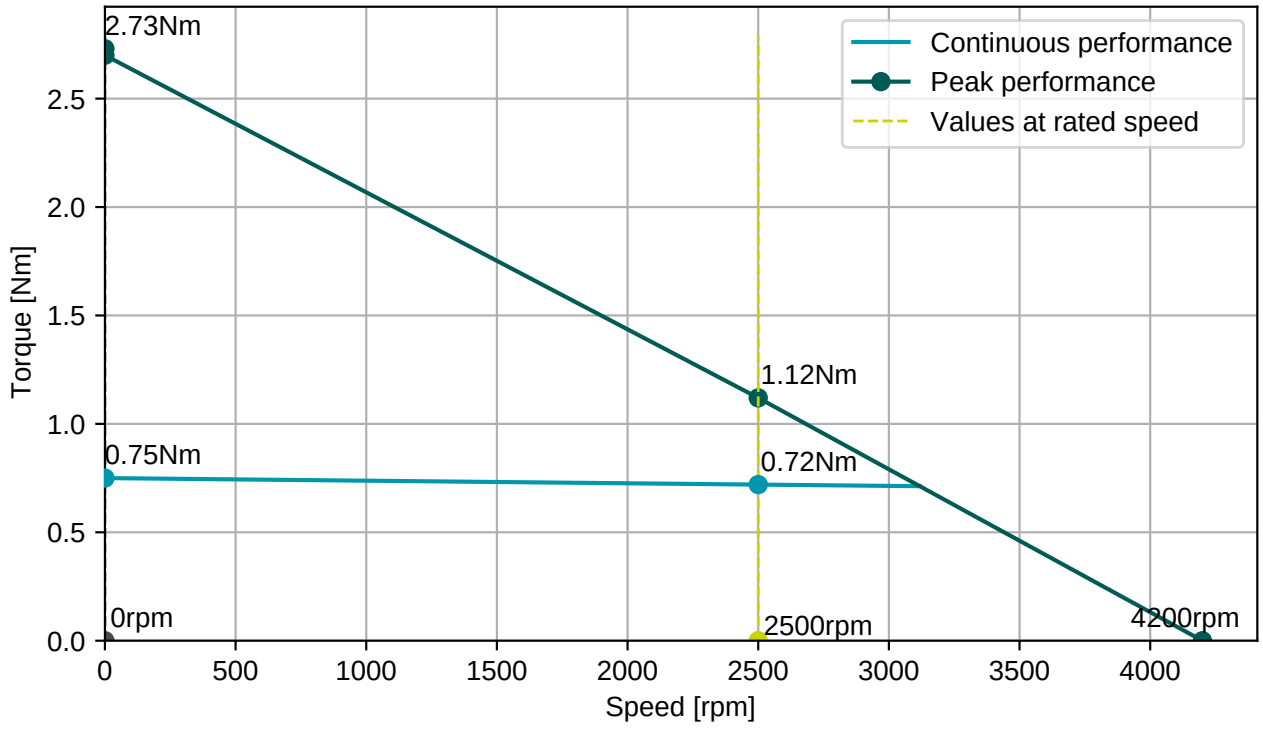

BGC110N00001216000
M23, 8 poles, rotary

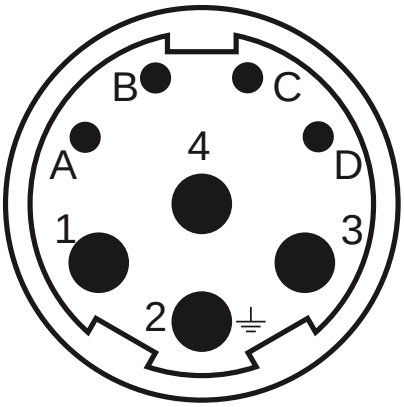

AGC113N00001215000
M23, 17 poles, rotary

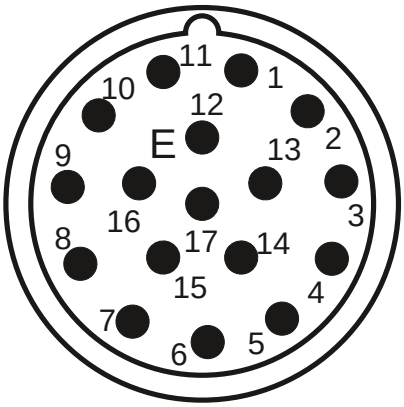

Connector 1 (9)	
1	U
4	V
3	W
2	PE
A	Brake+
B	Brake-
C	
D	

Connector 2 (130)	
1/9	SIN/REFSIN
3/11	COS/REFCOS
5/13	DATA/DATA-
4/2	Us/GND
14/7	Therm

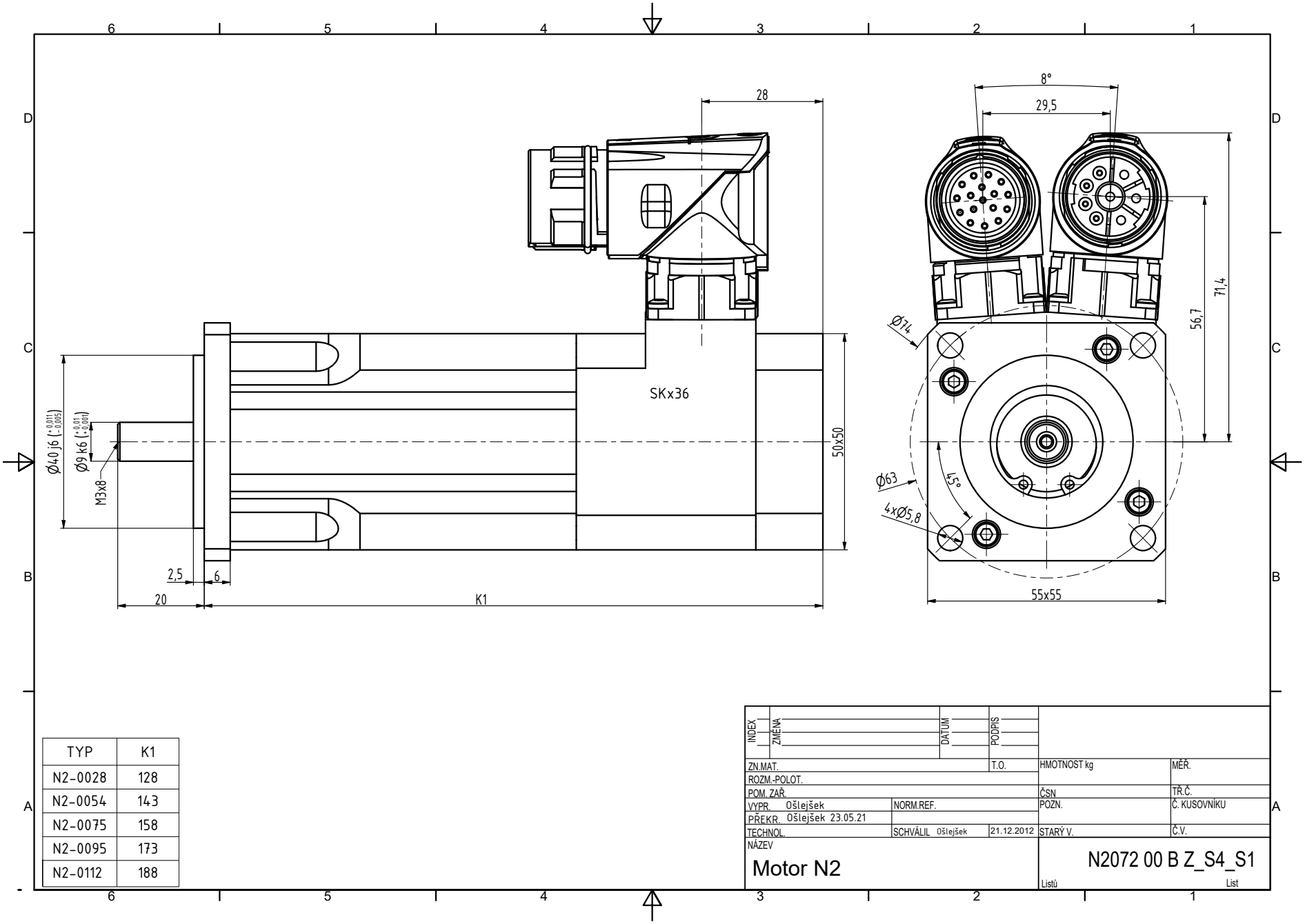

TYP	K1
N2-0028	128
N2-0054	143
N2-0075	158
N2-0095	173
N2-0112	188

INDEX	ZMĚNA	DATUM	PODPIS

ZN.MAT.			T.O.	HMOTNOST kg	MĚŘ.
ROZM.-POLOT.					
POM. ZAŘ.				ČSN	TŘ.Č.
VYPR. Ošlejšek	NORM.REF.			POZN.	Č. KUSOVNÍKU
PŘEKR. Ošlejšek 23.05.21					
TECHNOL.	SCHVÁLIL Ošlejšek	21.12.2012		STARÝ V.	Č.V.

NÁZEV

Motor N2

N2072 00 B Z_S4_S1

Listů List