Engineering data (WIN 1165)		
DC bus voltage	560	V DC
Nominal AC voltage	380	V AC (rms)
Rated voltage	349	V AC (rms)
Rated power	8.6	kW
Rated speed	3000	rpm
Rated torque	27.30	Nm
Rated current	16.18	A (rms)
Peak torque	180	Nm
Peak current	101.8	A (rms)
Stall torque	60	Nm
Stall current	30	A (rms)
No load speed	3140	rpm
EMF constant ±10%	125	V AC (rms) / 1000rpm
Theoretical torque constant ±10%	2.067	Nm / A (rms)
Torque constant ±10% @ rated load	1.687	Nm / A (rms)
Number of poles	10	
Electrical time constant	18.75	ms
Winding terminal resistance	0.16	Ω
Rotary field terminal inductance	3	mH

Customs info	
HS Code	85015230

Mechanical data (setting 16)		
Max mechanical speed	6000	rpm
Mech. time constant	0.69	ms
Thermal time constant	108	min
Rotor inertia	107	kgcm²
Protection	IP64	
Color	RAL 9005	
Cooling	Convection	
Motor-only mass	33.5	kg
Max. axial force 20kh	274	N
Max. radial force 20kh*	1443	N
Max. axial force 100kh	160	N
Max. radial force 100kh*	844	N

** Defined for point of action at ½ output shaft length*

Sensors	
Temperature	PT1000 {PT1000}
Feedback	SRS50 (Hiperface) single-turn, 1024 sin/cos+12bits

Brake		
Braking torque	36.00	Nm
Voltage	24	V DC
Power @20°C	26.0	W
Current @20°C	1.08	A
Inertia	6.20	kgcm²
Mass	2.85	kg

Torque / speed curve

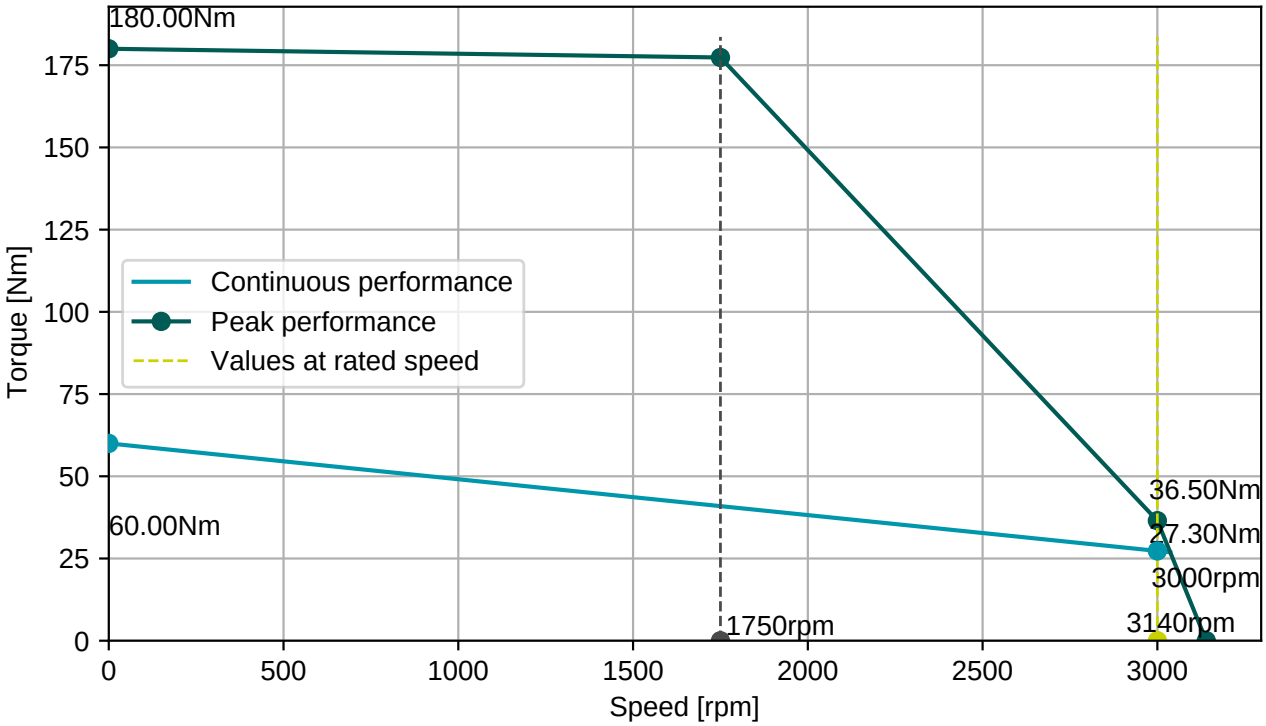

BGC110N00001216000

M23, 8 poles, rotary

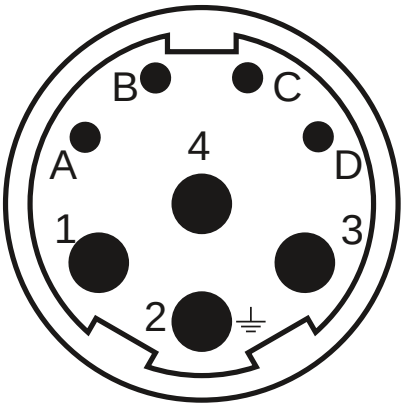

AGC113N00001215000

M23, 17 poles, rotary

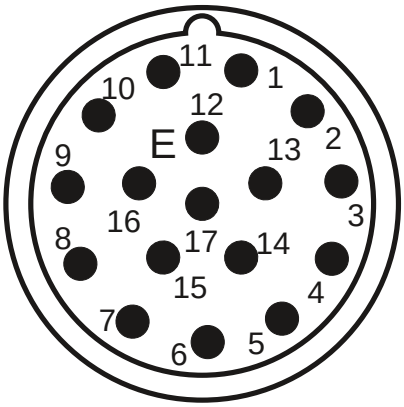

Connector 1 (9)	
1	U
4	V
3	W
2	PE
A	Brake+
B	Brake-
C	
D	

Connector 2 (130)	
1/9	SIN/REFSIN
3/11	COS/REFCOS
5/13	DATA/DATA-
4/2	Us/GND
14/7	Therm

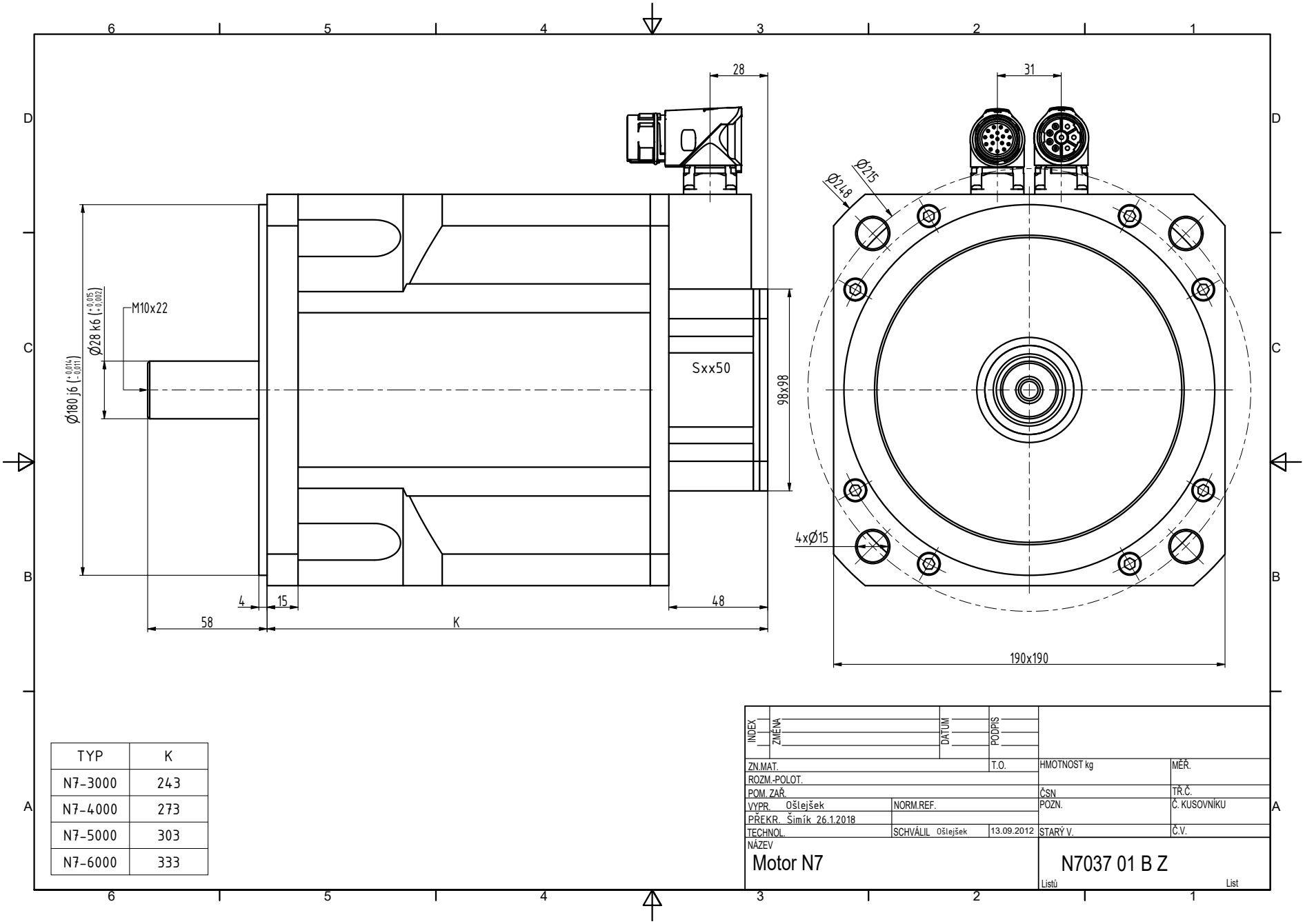

TYP	K
N7-3000	243
N7-4000	273
N7-5000	303
N7-6000	333

INDEX	ZMĚNA	DATUM	PODPIS

ZN.MAT.		T.O.	HMOTNOST kg	MĚŘ.
ROZM.-POLOT.				
POM. ZAŘ.			ČSN	TŘ.Č.
VYPR. Ošlejšek	NORM.REF.		POZN.	Č. KUSOVNÍKU
PŘEKR. Šimík 26.1.2018				
TECHNOL.	SCHVÁLIL Ošlejšek	13.09.2012	STARÝ V.	Č.V.

NÁZEV
Motor N7

N7037 01 B Z

Listů List