Engineering data (WIN 945)		
DC bus voltage	560	V DC
Nominal AC voltage	380	V AC (rms)
Rated voltage	311	V AC (rms)
Rated power	9.2	kW
Rated speed	2000	rpm
Rated torque	44.00	Nm
Rated current	19.66	A (rms)
Peak torque	180	Nm
Peak current	81.6	A (rms)
Stall torque	60	Nm
Stall current	24	A (rms)
No load speed	2510	rpm
EMF constant ±10%	151	V AC (rms) / 1000rpm
Theoretical torque constant ±10%	2.5	Nm / A (rms)
Torque constant ±10% @ rated load	2.2	Nm / A (rms)
Number of poles	10	
Electrical time constant	21.25	ms
Winding terminal resistance	0.24	Ω
Rotary field terminal inductance	5.1	mH

Customs info	
HS Code	85015230

Mechanical data (setting 16)		
Max mechanical speed	6000	rpm
Mech. time constant	0.71	ms
Thermal time constant	108	min
Rotor inertia	107	kgcm²
Protection	IP64	
Color	RAL 9005	
Cooling	Convection	
Motor-only mass	33.5	kg
Max. axial force 20kh	314	N
Max. radial force 20kh*	1652	N
Max. axial force 100kh	184	N
Max. radial force 100kh*	966	N

** Defined for point of action at ½ output shaft length*

Sensors	
Temperature	PT1000 {PT1000}
Feedback	SRM50 (Hiperface) multi-turn, 1024 sin/cos+12bits

Brake		
Braking torque	36.00	Nm
Voltage	24	V DC
Power @20°C	26.0	W
Current @20°C	1.08	A
Inertia	6.20	kgcm²
Mass	2.85	kg

Torque / speed curve

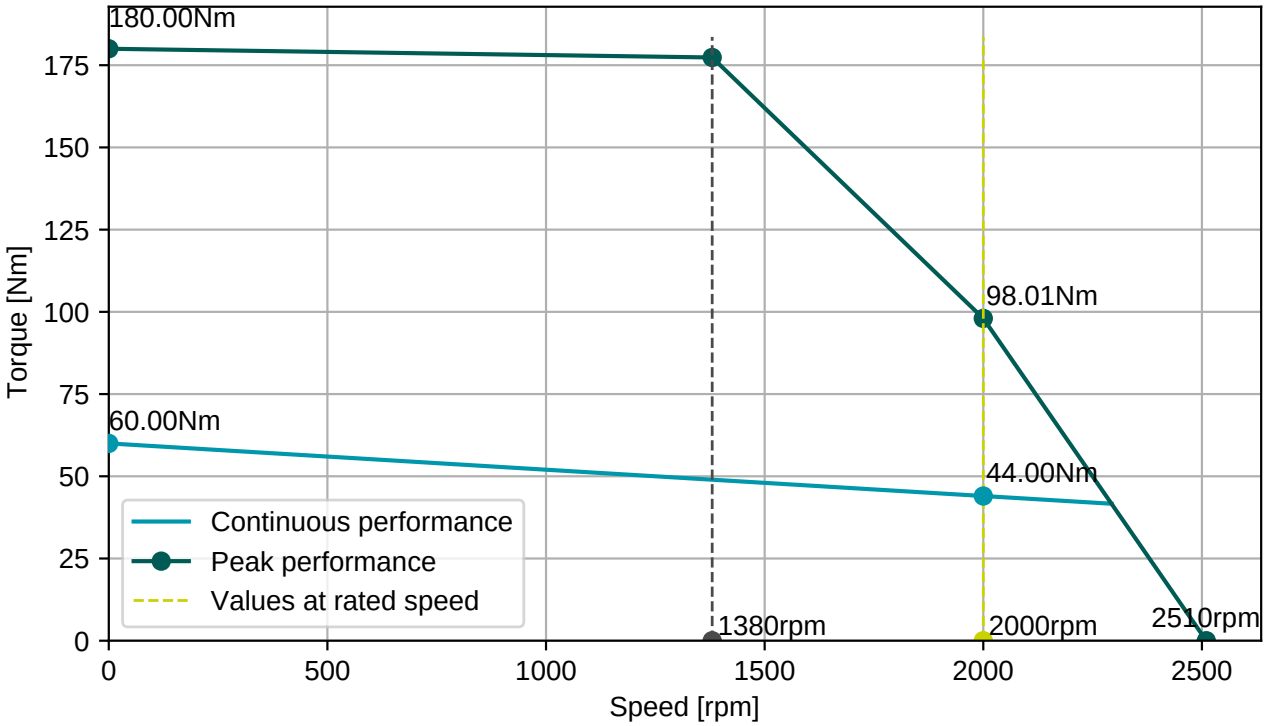

BGC110N00001216000
M23, 8 poles, rotary

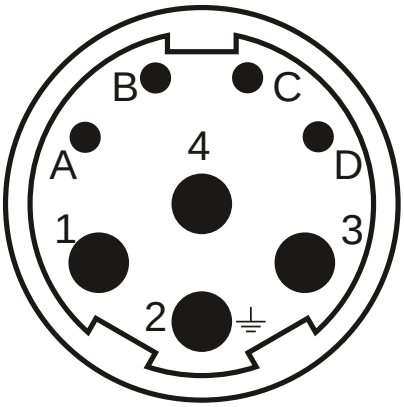

AGC113N00001215000
M23, 17 poles, rotary

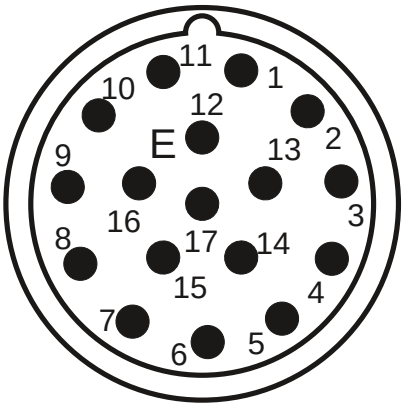

Connector 1 (9)	
1	U
4	V
3	W
2	PE
A	Brake+
B	Brake-
C	
D	

Connector 2 (130)	
1/9	SIN/REFSIN
3/11	COS/REFCOS
5/13	DATA/DATA-
4/2	Us/GND
14/7	Therm

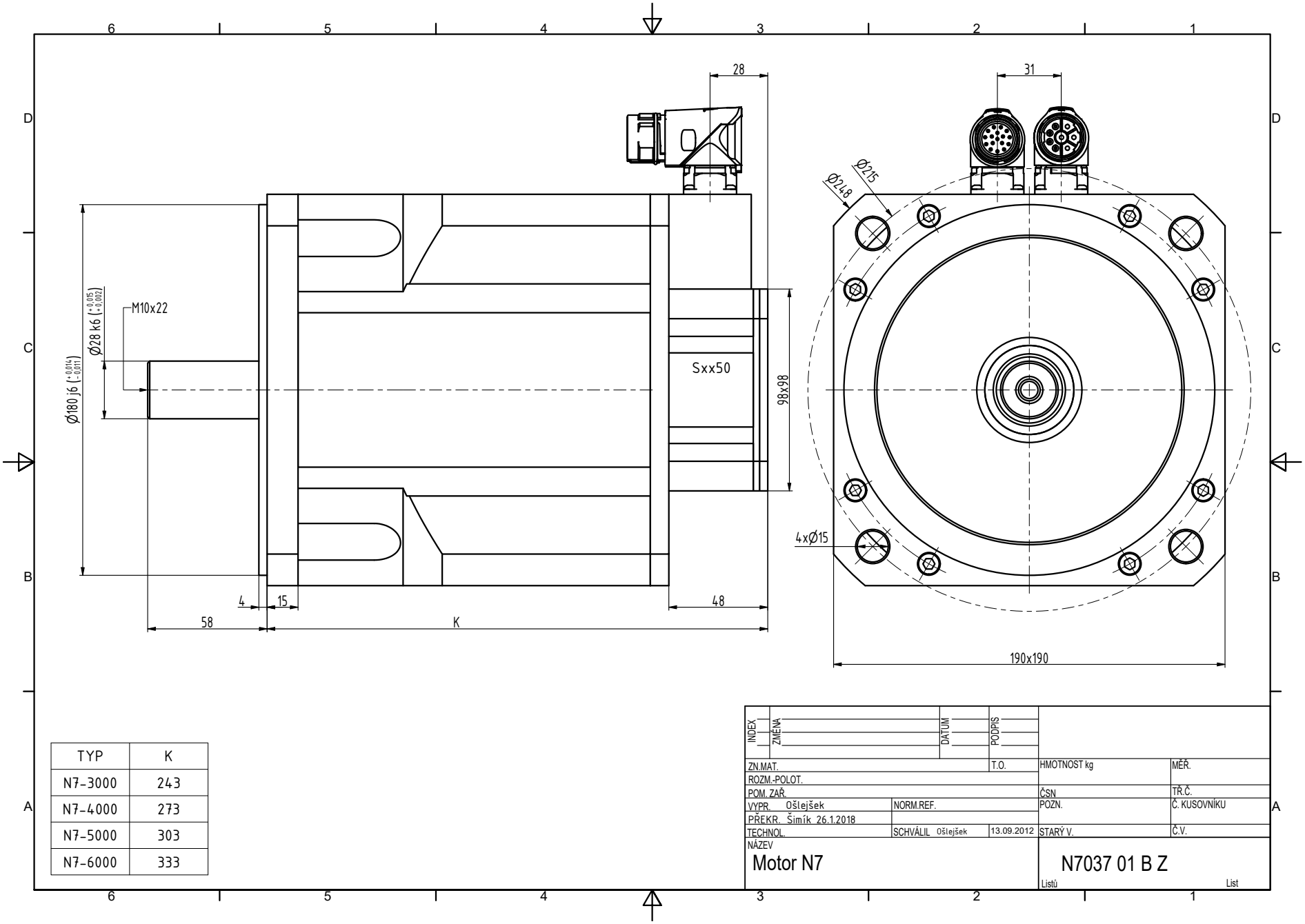

TYP	K
N7-3000	243
N7-4000	273
N7-5000	303
N7-6000	333

INDEX	ZMĚNA	DATUM	PODPIS

ZN.MAT.		T.O.	HMOTNOST kg	MĚŘ.
ROZM.-POLOT.				
POM. ZAŘ.			ČSN	TŘ.Č.
VYPR. Ošlejšek	NORM.REF.		POZN.	Č. KUSOVNÍKU
PŘEKR. Šimík 26.1.2018				
TECHNOL.	SCHVÁLIL Ošlejšek	13.09.2012	STARÝ V.	Č.V.

NÁZEV
Motor N7

N7037 01 B Z

Listů List