| Engineering data (WIN 879) | | |
|---|---|---|
| DC bus voltage | 560 | V DC |
| Nominal AC voltage | 380 | V AC (rms) |
| Rated voltage | 311 | V AC (rms) |
| Rated power | 6.9 | kW |
| Rated speed | 2000 | rpm |
| Rated torque | 32.80 | Nm |
| Rated current | 15.38 | A (rms) |
| Peak torque | 120 | Nm |
| Peak current | 59.1 | A (rms) |
| Stall torque | 40 | Nm |
| Stall current | 16.7 | A (rms) |
| No load speed | 2620 | rpm |
| EMF constant ±10% | 145 | V AC (rms) / 1000rpm |
| Theoretical torque constant ±10% | 2.4 | Nm / A (rms) |
| Torque constant ±10% @ rated load | 2.1 | Nm / A (rms) |
| Number of poles | 10 | |
| Electrical time constant | 18.14 | ms |
| Winding terminal resistance | 0.43 | Ω |
| Rotary field terminal inductance | 7.8 | mH |

| Customs info | |
|---|---|
| HS Code | 85015220 |

| Mechanical data (setting 16) | | |
|---|---|---|
| Max mechanical speed | 6000 | rpm |
| Mech. time constant | 0.89 | ms |
| Thermal time constant | 90 | min |
| Rotor inertia | 69 | kgcm² |
| Protection | IP64 | |
| Color | RAL 9005 | |
| Cooling | Convection | |
| Motor-only mass | 20.2 | kg |
| Max. axial force 20kh | 281 | N |
| Max. radial force 20kh* | 1478 | N |
| Max. axial force 100kh | 164 | N |
| Max. radial force 100kh* | 864 | N |

** Defined for point of action at ½ output shaft length*

| Sensors | |
|---|---|
| Temperature | PT1000 {PT1000} |
| Feedback | SRS50 (Hiperface) single-turn, 1024 sin/cos+12bits |

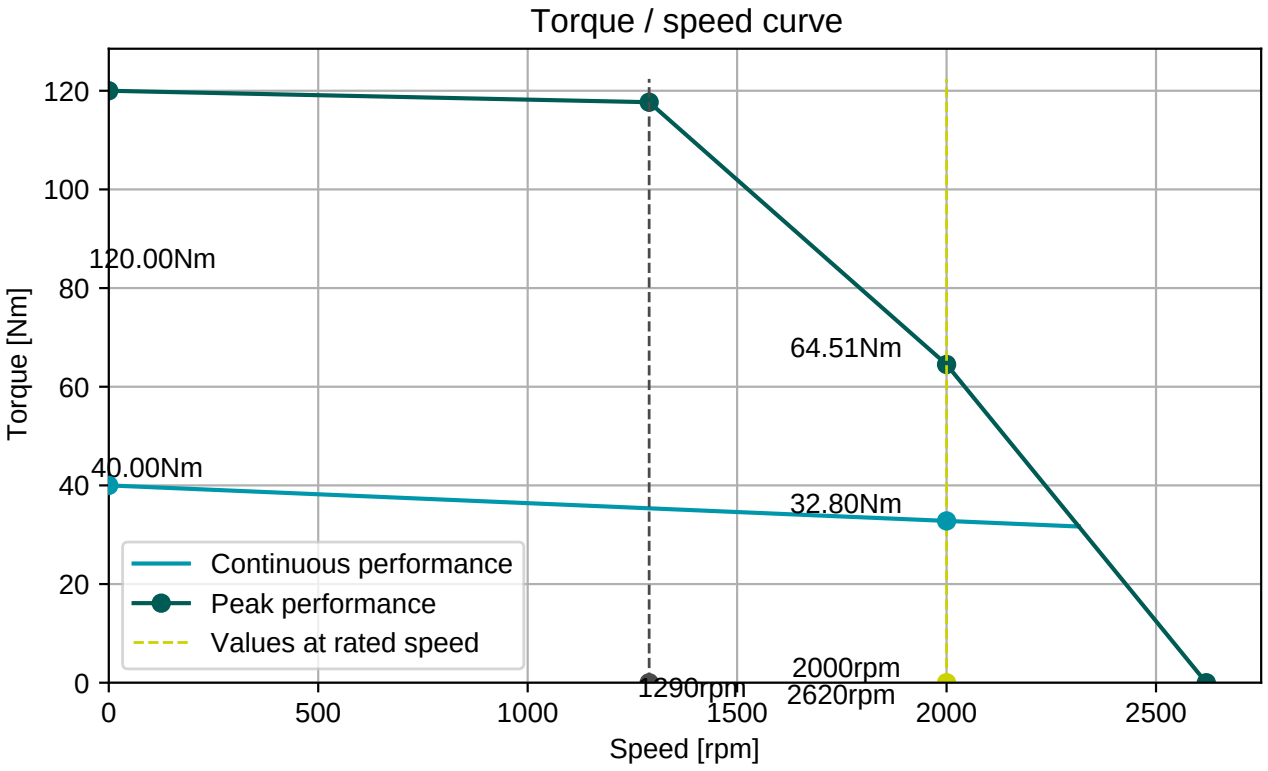


**BGC110N00001216000**
M23, 8 poles, rotary

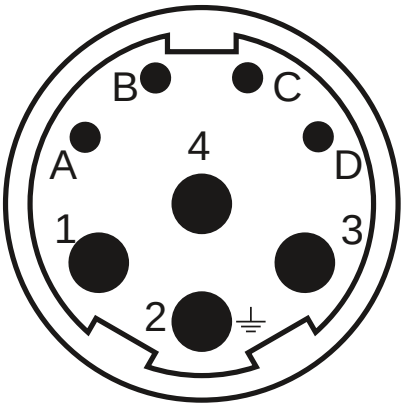


**AGC113N00001215000**
M23, 17 poles, rotary

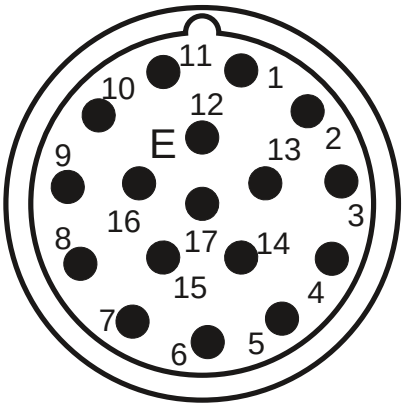


| Connector 1 (9) | |
|---|---|
| **1** | U |
| **4** | V |
| **3** | W |
| **2** | PE |
| **A** | Brake+ |
| **B** | Brake- |
| **C** | |
| **D** | |

| Connector 2 (130) | |
|---|---|
| **1/9** | SIN/REFSIN |
| **3/11** | COS/REFCOS |
| **5/13** | DATA/DATA- |
| **4/2** | Us/GND |
| **14/7** | Therm |

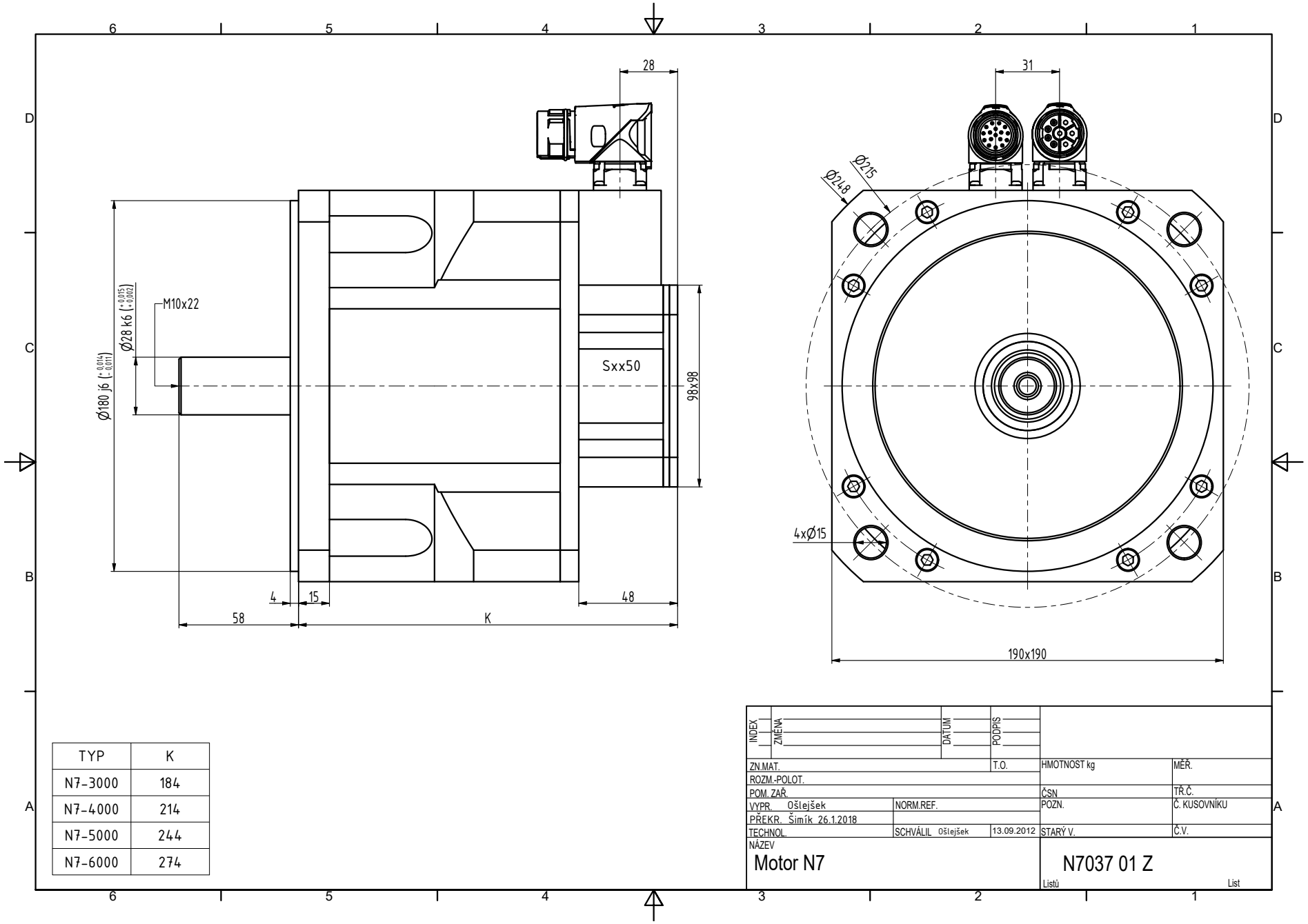


| TYP | K |
|---|---|
| N7-3000 | 184 |
| N7-4000 | 214 |
| N7-5000 | 244 |
| N7-6000 | 274 |

| INDEX | ZMĚNA | DATUM | PODPIS | | |
|---|---|---|---|---|---|
| ZN.MAT. | | | T.O. | HMOTNOST kg | MĚŘ. |
| ROZM.-POLOT. | | | | | |
| POM. ZAŘ. | | | | ČSN | TŘ.Č. |
| VYPR. Ošlejšek | | NORM.REF. | | POZN. | Č. KUSOVNÍKU |
| PŘEKR. Šimík 26.1.2018 | | | | | |
| TECHNOL. | | SCHVÁLIL Ošlejšek | 13.09.2012 | STARÝ V. | Č.V. |

NÁZEV
Motor N7

N7037 01 Z

Listů List