Engineering data (WIN 861)		
DC bus voltage	560	V DC
Nominal AC voltage	380	V AC (rms)
Rated voltage	333	V AC (rms)
Rated power	7.2	kW
Rated speed	3000	rpm
Rated torque	23.00	Nm
Rated current	15.52	A (rms)
Peak torque	85	Nm
Peak current	57.7	A (rms)
Stall torque	30	Nm
Stall current	16.3	A (rms)
No load speed	3420	rpm
EMF constant ±10%	111	V AC (rms) / 1000rpm
Theoretical torque constant ±10%	1.84	Nm / A (rms)
Torque constant ±10% @ rated load	1.48	Nm / A (rms)
Number of poles	10	
Electrical time constant	15.61	ms
Winding terminal resistance	0.41	Ω
Rotary field terminal inductance	6.4	mH

Customs info	
HS Code	85015220

Mechanical data (setting 16)		
Max mechanical speed	6000	rpm
Mech. time constant	1.04	ms
Thermal time constant	80	min
Rotor inertia	49.5	kgcm²
Protection	IP64	
Color	RAL 9005	
Cooling	Convection	
Motor-only mass	15.5	kg
Max. axial force 20kh	231	N
Max. radial force 20kh*	1214	N
Max. axial force 100kh	135	N
Max. radial force 100kh*	710	N

** Defined for point of action at ½ output shaft length*

Sensors	
Temperature	PT1000 {PT1000}
Feedback	SRM50 (Hiperface) multi-turn, 1024 sin/cos+12bits

Torque / speed curve

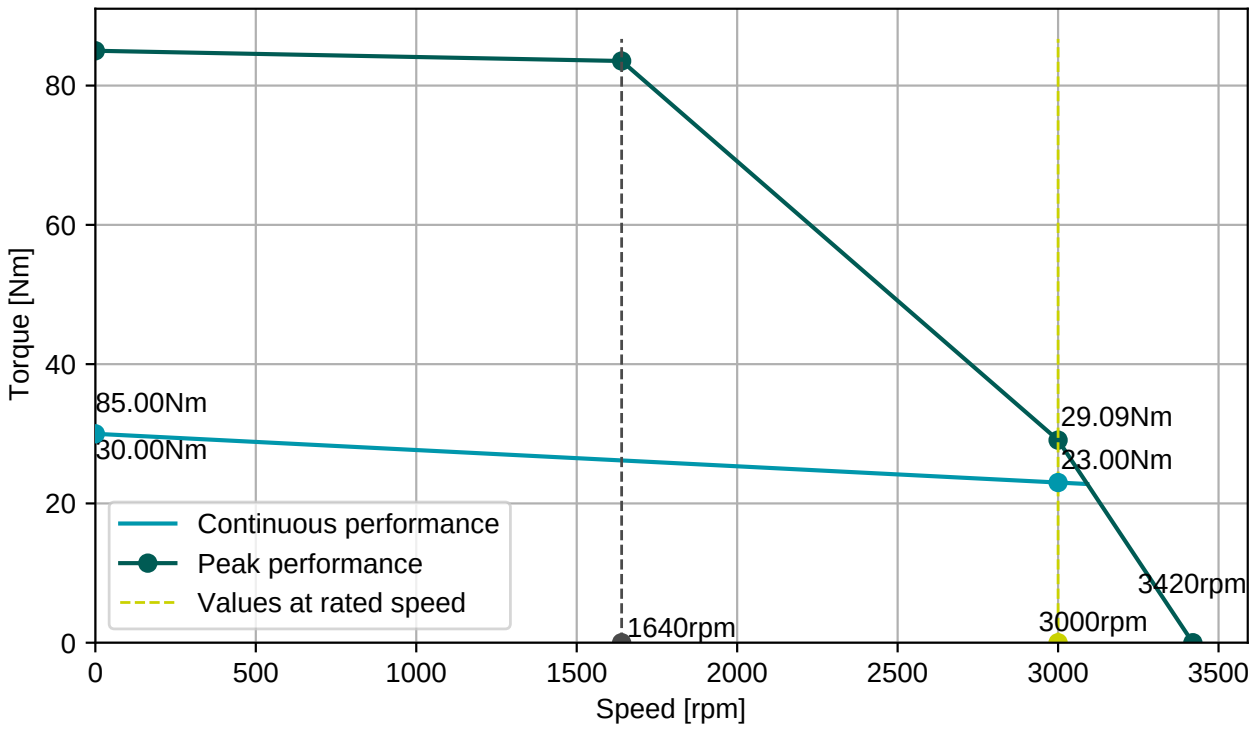

BGC110N00001216000
M23, 8 poles, rotary

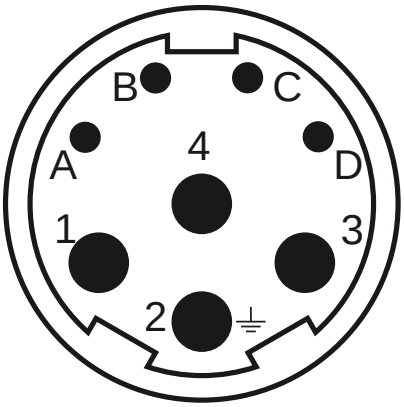

AGC113N00001215000
M23, 17 poles, rotary

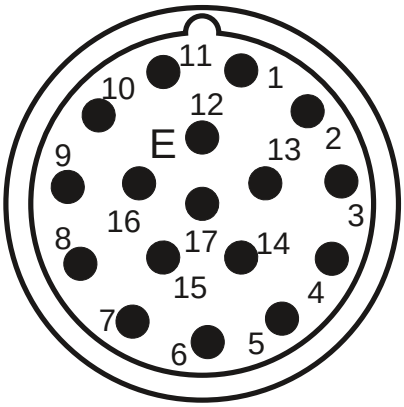

Connector 1 (9)	
1	U
4	V
3	W
2	PE
A	Brake+
B	Brake-
C	
D	

Connector 2 (130)	
1/9	SIN/REFSIN
3/11	COS/REFCOS
5/13	DATA/DATA-
4/2	Us/GND
14/7	Therm

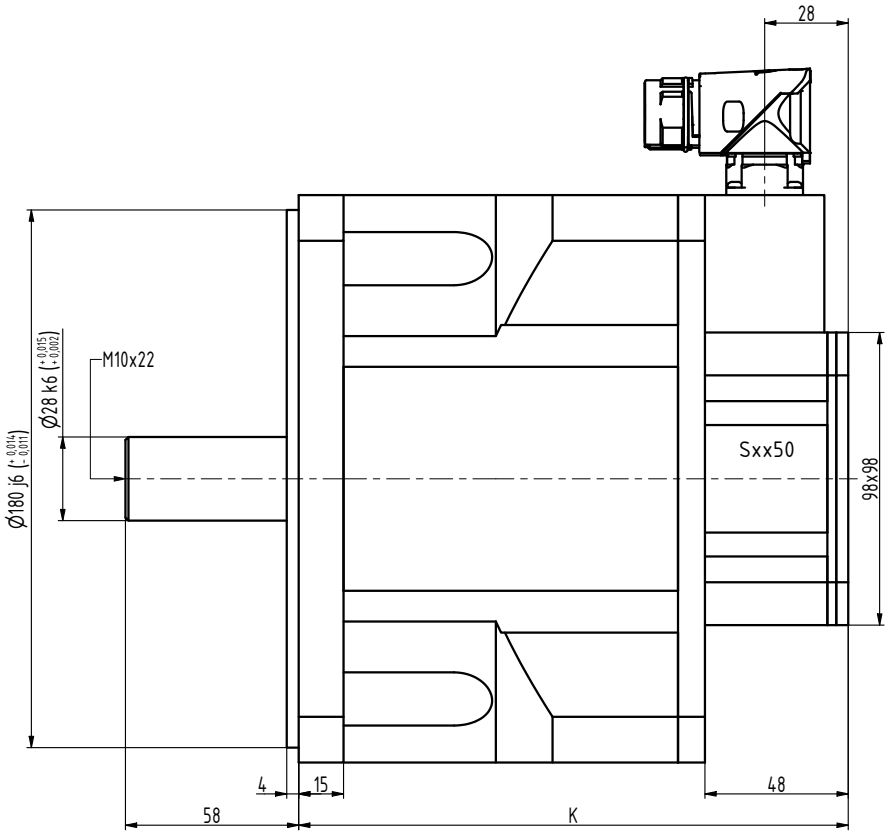

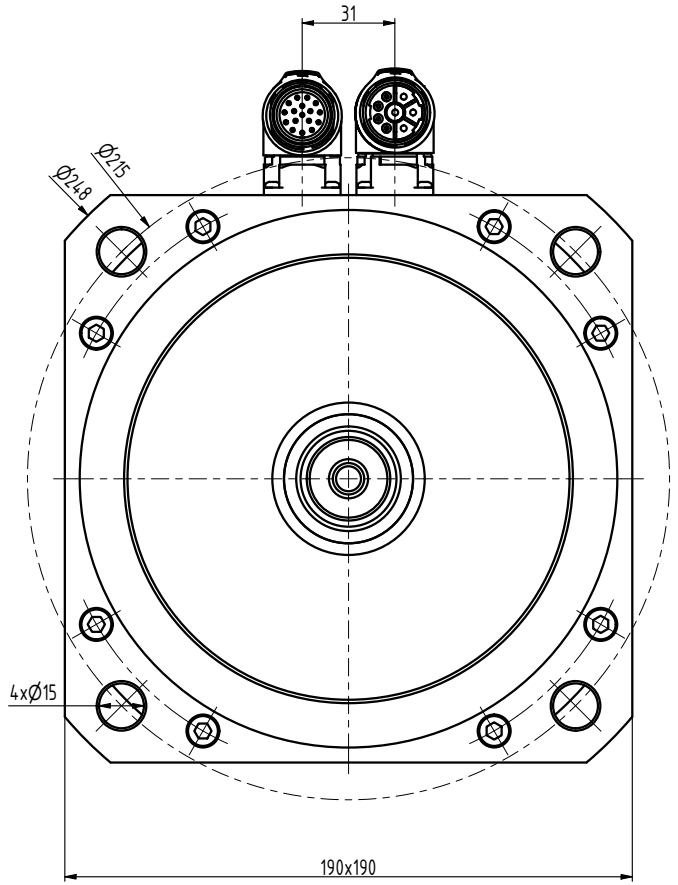

TYP	K
N7-3000	184
N7-4000	214
N7-5000	244
N7-6000	274

INDEX	ZMĚNA	DATUM	PODPIS		
ZN.MAT.			T.O.	HMOTNOST kg	MĚŘ.
ROZM.-POLOT.					
POM. ZAŘ.				ČSN	TŘ.Č.
VYPR. Ošlejšek		NORM.REF.		POZN.	Č. KUSOVNÍKU
PŘEKR. Šimík 26.1.2018					
TECHNOL.		SCHVÁLIL Ošlejšek	13.09.2012	STARÝ V.	Č.V.
NÁZEV	Motor N7			N7037 01 Z	
				Listů	List