Engineering data (WIN 833)		
DC bus voltage	560	V DC
Nominal AC voltage	380	V AC (rms)
Rated voltage	257	V AC (rms)
Rated power	7.9	kW
Rated speed	3000	rpm
Rated torque	25.00	Nm
Rated current	20.1	A (rms)
Peak torque	120	Nm
Peak current	90.2	A (rms)
Stall torque	40	Nm
Stall current	26.3	A (rms)
No load speed	4130	rpm
EMF constant ±10%	92	V AC (rms) / 1000rpm
Theoretical torque constant ±10%	1.52	Nm / A (rms)
Torque constant ±10% @ rated load	1.24	Nm / A (rms)
Number of poles	10	
Electrical time constant	18.24	ms
Winding terminal resistance	0.17	Ω
Rotary field terminal inductance	3.1	mH

Customs info	
HS Code	85015230

Mechanical data (setting 16)		
Max mechanical speed	6000	rpm
Mech. time constant	0.88	ms
Thermal time constant	90	min
Rotor inertia	69	kgcm²
Protection	IP64	
Color	RAL 9005	
Cooling	Convection	
Motor-only mass	20.2	kg
Max. axial force 20kh	245	N
Max. radial force 20kh*	1291	N
Max. axial force 100kh	143	N
Max. radial force 100kh*	755	N

** Defined for point of action at ½ output shaft length*

Sensors	
Temperature	PT1000 {PT1000}
Feedback	SRS50 (Hiperface) single-turn, 1024 sin/cos+12bits

Torque / speed curve

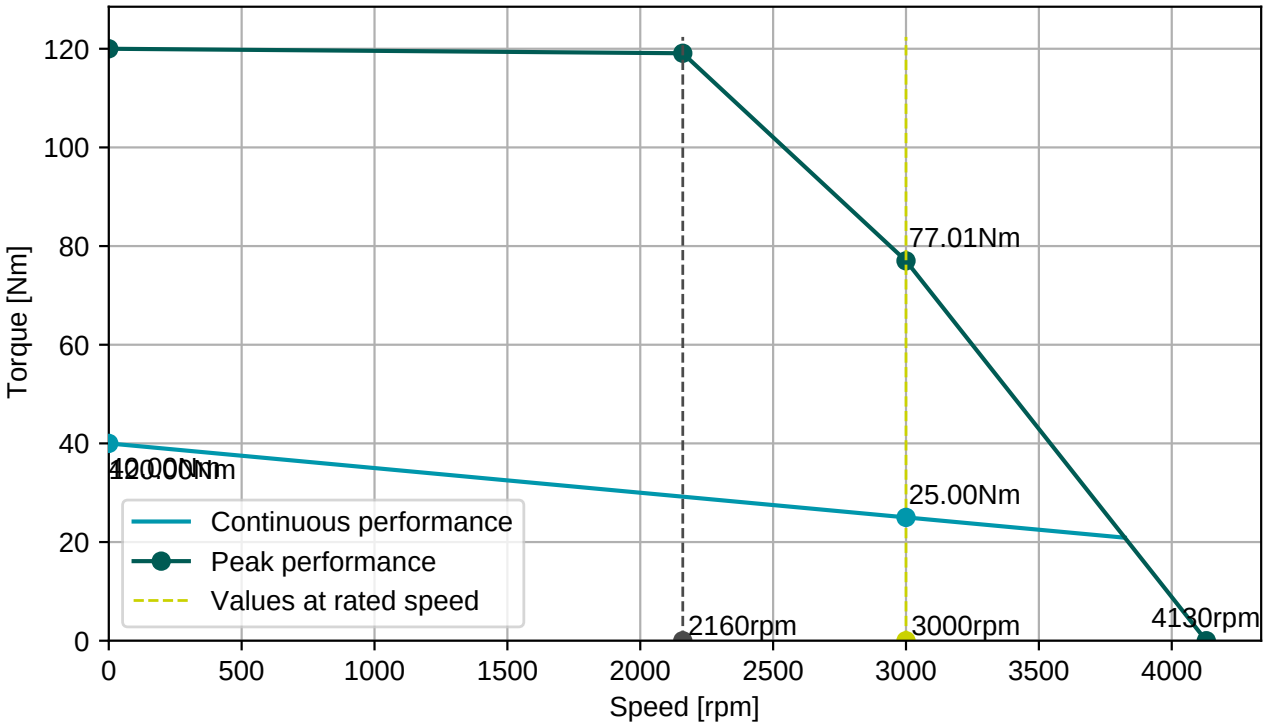

BGC110N00001216000
M23, 8 poles, rotary

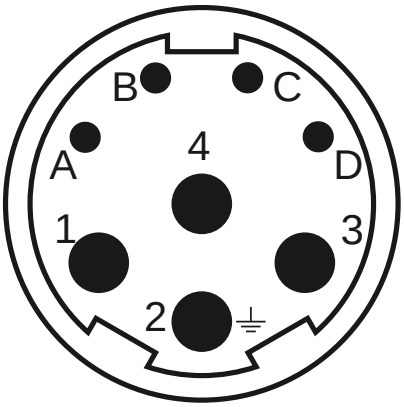

AGC113N00001215000
M23, 17 poles, rotary

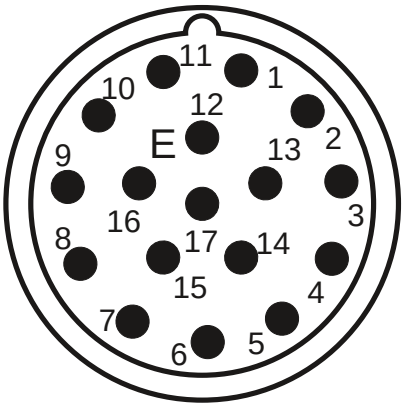

Connector 1 (9)	
1	U
4	V
3	W
2	PE
A	Brake+
B	Brake-
C	
D	

Connector 2 (130)	
1/9	SIN/REFSIN
3/11	COS/REFCOS
5/13	DATA/DATA-
4/2	Us/GND
14/7	Therm

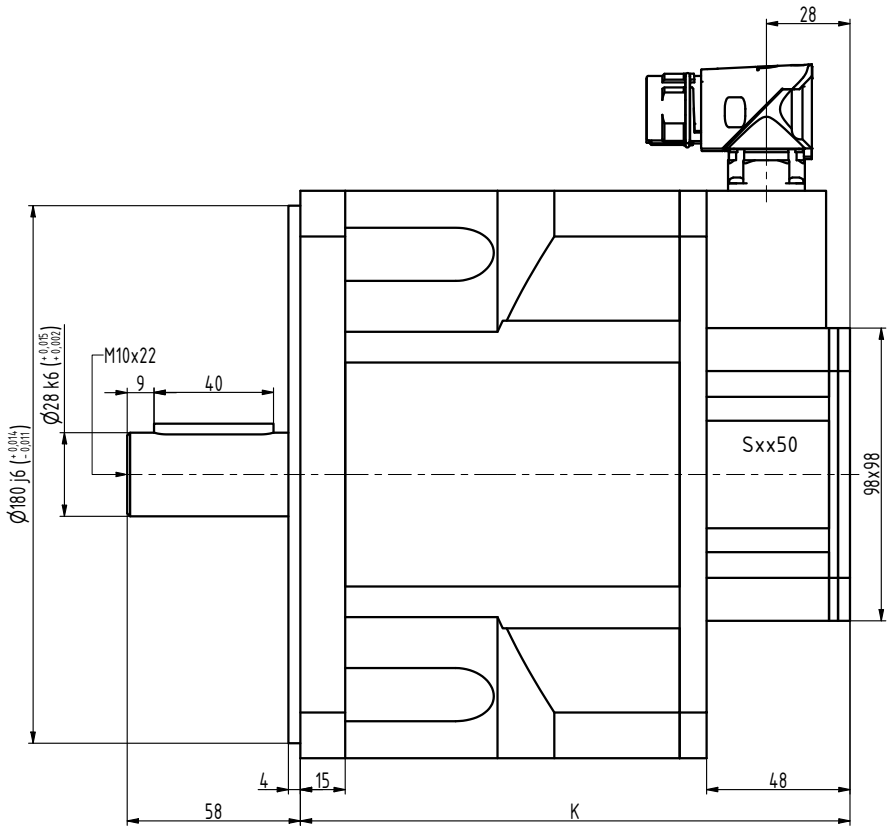

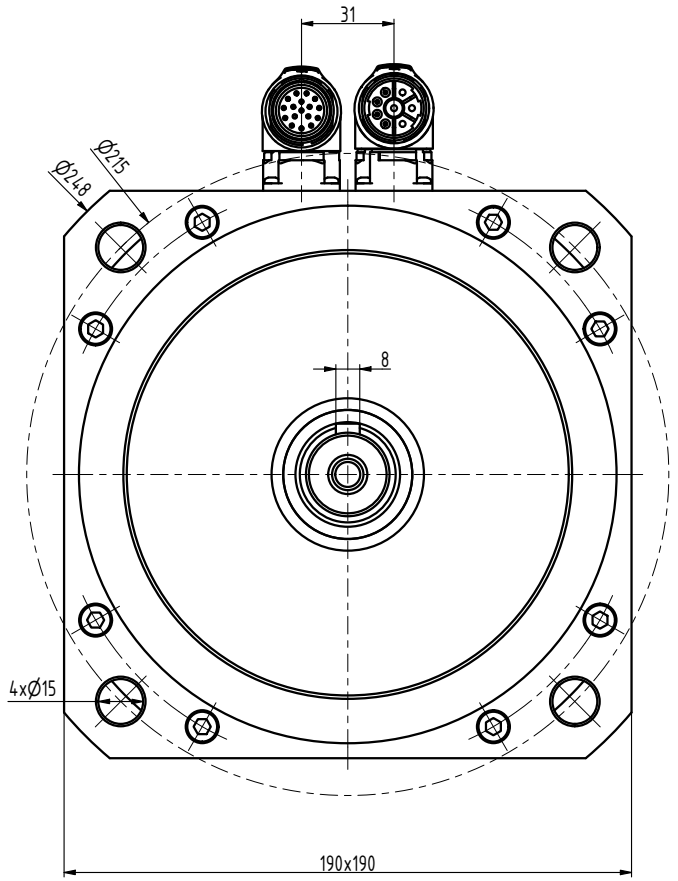

TYP	K
N7-3000	184
N7-4000	214
N7-5000	244
N7-6000	274

INDEX	ZMĚNA	DATUM	PODPIS

ZN.MAT.			T.O.	HMOTNOST kg	MĚŘ.
ROZM.-POLOT.					
POM. ZAŘ.				ČSN	TŘ.Č.
VYPR. Ošlejšek	NORM.REF.			POZN.	Č. KUSOVNÍKU
PŘEKR. Šimík 26.1.2018					
TECHNOL.	SCHVÁLIL Ošlejšek	13.09.2012		STARÝ V.	Č.V.

NÁZEV
Motor N7

N7037 01 P Z

Listů List