| Engineering data (WIN 985) | | |
|---|---|---|
| DC bus voltage | 560 | V DC |
| Nominal AC voltage | 380 | V AC (rms) |
| Rated voltage | 288 | V AC (rms) |
| Rated power | 5.3 | kW |
| Rated speed | 2000 | rpm |
| Rated torque | 25.30 | Nm |
| Rated current | 12.92 | A (rms) |
| Peak torque | 90 | Nm |
| Peak current | 45.9 | A (rms) |
| Stall torque | 30 | Nm |
| Stall current | 12.8 | A (rms) |
| No load speed | 2670 | rpm |
| EMF constant ±10% | 142 | V AC (rms) / 1000rpm |
| Theoretical torque constant ±10% | 2.35 | Nm / A (rms) |
| Torque constant ±10% @ rated load | 1.96 | Nm / A (rms) |
| Number of poles | 10 | |
| Electrical time constant | 14.60 | ms |
| Winding terminal resistance | 0.63 | Ω |
| Rotary field terminal inductance | 9.2 | mH |

| Customs info | |
|---|---|
| HS Code | 85015220 |

| Mechanical data (setting 16) | | |
|---|---|---|
| Max mechanical speed | 6000 | rpm |
| Mech. time constant | 0.65 | ms |
| Thermal time constant | 52 | min |
| Rotor inertia | 32.7 | kgcm² |
| Protection | IP64 | |
| Color | RAL 9005 | |
| Cooling | Convection | |
| Motor-only mass | 18 | kg |
| Max. axial force 20kh | 156 | N |
| Max. radial force 20kh* | 820 | N |
| Max. axial force 100kh | 91 | N |
| Max. radial force 100kh* | 480 | N |

** Defined for point of action at ½ output shaft length*

| Sensors | |
|---|---|
| Temperature | PT1000 {PT1000} |
| Feedback | SRM50 (Hiperface) multi-turn, 1024 sin/cos+12bits |

Torque / speed curve

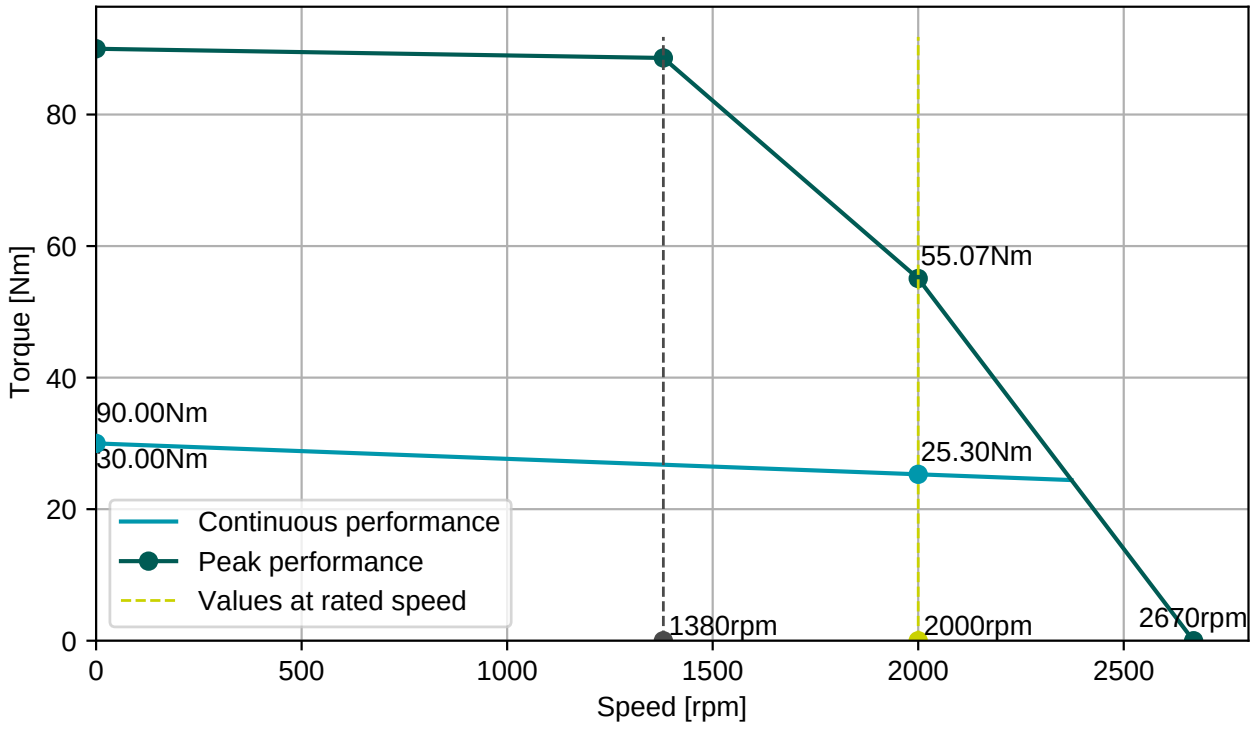


**BGC110N00001216000**
M23, 8 poles, rotary

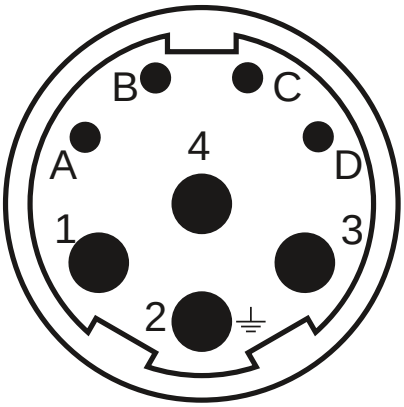


**AGC113N00001215000**
M23, 17 poles, rotary

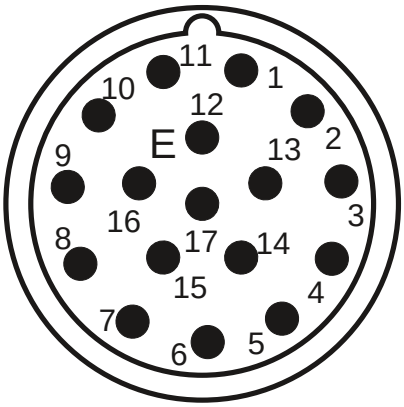


| Connector 1 (9) | |
|---|---|
| **1** | U |
| **4** | V |
| **3** | W |
| **2** | PE |
| **A** | Brake+ |
| **B** | Brake- |
| **C** | |
| **D** | |

| Connector 2 (130) | |
|---|---|
| **1/9** | SIN/REFSIN |
| **3/11** | COS/REFCOS |
| **5/13** | DATA/DATA- |
| **4/2** | Us/GND |
| **14/7** | Therm |

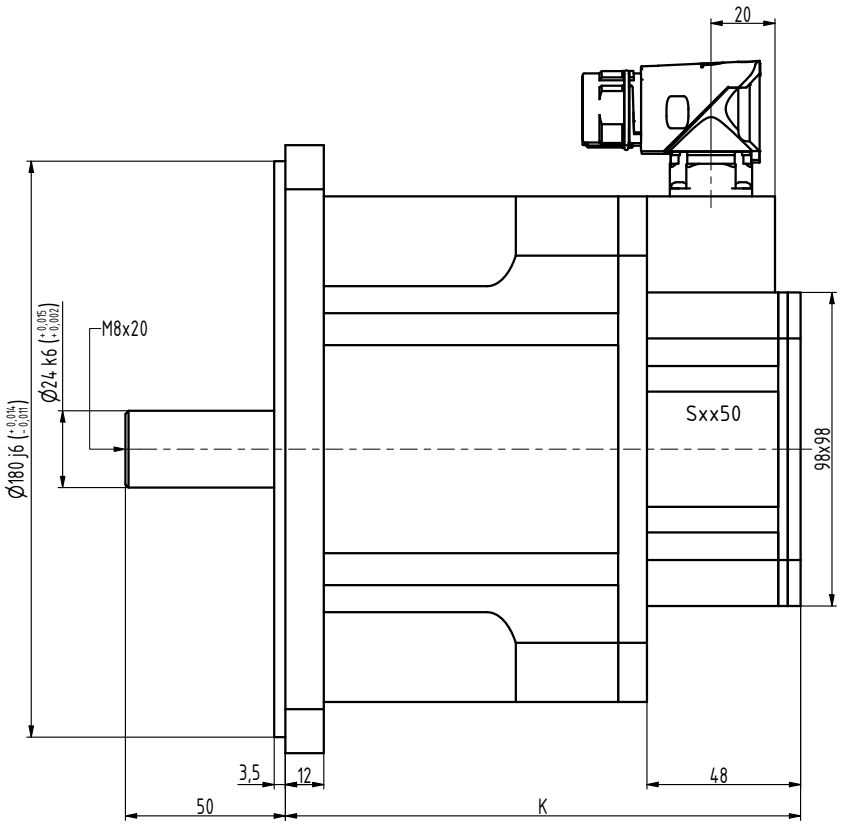


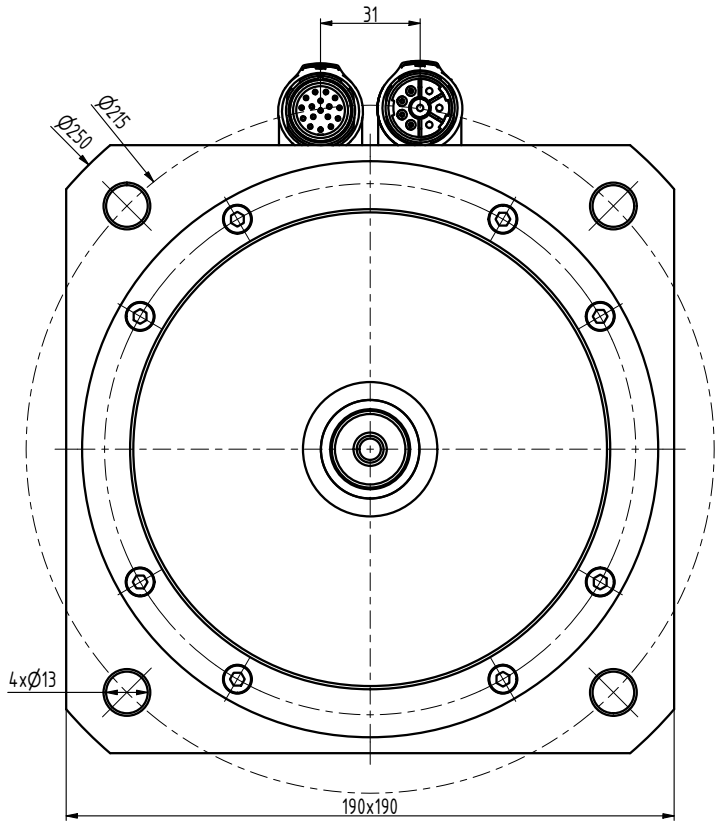


| TYP | K |
|---|---|
| N6-1800 | 161 |
| N6-2400 | 186 |
| N6-3000 | 211 |
| N6-3800 | 236 |
| N6-4400 | 261 |

| INDEX | ZMĚNA | DATUM | PODPIS | | |
|---|---|---|---|---|---|
| ZN.MAT. | | | T.O. | HMOTNOST kg | MĚŘ. |
| ROZM.-POLOT. | | | | | |
| POM. ZAŘ. | | | | ČSN | TŘ.Č. |
| VYPR. Šimík | | NORM.REF. | | POZN. | Č. KUSOVNÍKU |
| PŘEKR. | | | | | |
| TECHNOL. | | SCHVÁLIL Ošlejšek | 05.09.2017 | STARÝ V. | Č.V. |
| NÁZEV | Motor N6 | | | N6032 01 Z | |
| | | | | Listů | List |