Engineering data (WIN 940)		
DC bus voltage	560	V DC
Nominal AC voltage	380	V AC (rms)
Rated voltage	308	V AC (rms)
Rated power	7.9	kW
Rated speed	3000	rpm
Rated torque	25.00	Nm
Rated current	17.69	A (rms)
Peak torque	114	Nm
Peak current	83	A (rms)
Stall torque	38	Nm
Stall current	21.5	A (rms)
No load speed	3550	rpm
EMF constant ±10%	107	V AC (rms) / 1000rpm
Theoretical torque constant ±10%	1.77	Nm / A (rms)
Torque constant ±10% @ rated load	1.41	Nm / A (rms)
Number of poles	10	
Electrical time constant	13.44	ms
Winding terminal resistance	0.32	Ω
Rotary field terminal inductance	4.3	mH

Customs info	
HS Code	85015230

Mechanical data (setting 16)		
Max mechanical speed	6000	rpm
Mech. time constant	0.71	ms
Thermal time constant	57	min
Rotor inertia	39.9	kgcm²
Protection	IP64	
Color	RAL 9005	
Cooling	Convection	
Motor-only mass	24.7	kg
Max. axial force 20kh	142	N
Max. radial force 20kh*	745	N
Max. axial force 100kh	83	N
Max. radial force 100kh*	436	N

** Defined for point of action at ½ output shaft length*

Sensors	
Temperature	PT1000 {PT1000}
Feedback	SRM50 (Hiperface) multi-turn, 1024 sin/cos+12bits

Brake		
Braking torque	36.00	Nm
Voltage	24	V DC
Power @20°C	26.0	W
Current @20°C	1.08	A
Inertia	6.20	kgcm²
Mass	2.85	kg

Torque / speed curve

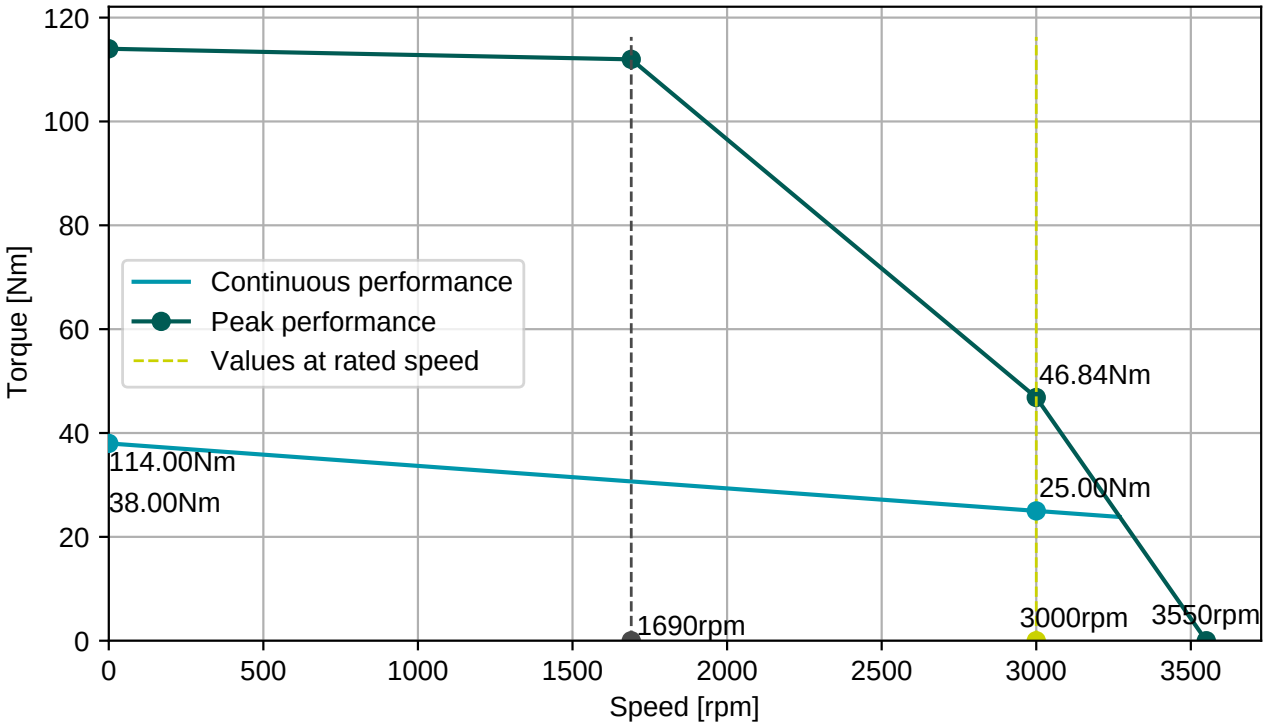

BGC110N00001216000
M23, 8 poles, rotary

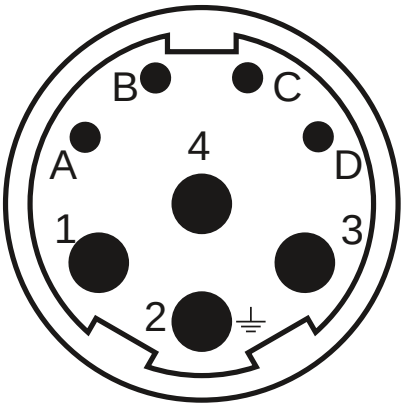

AGC113N00001215000
M23, 17 poles, rotary

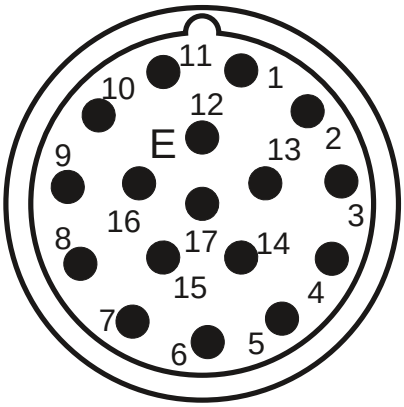

Connector 1 (9)	
1	U
4	V
3	W
2	PE
A	Brake+
B	Brake-
C	
D	

Connector 2 (130)	
1/9	SIN/REFSIN
3/11	COS/REFCOS
5/13	DATA/DATA-
4/2	Us/GND
14/7	Therm

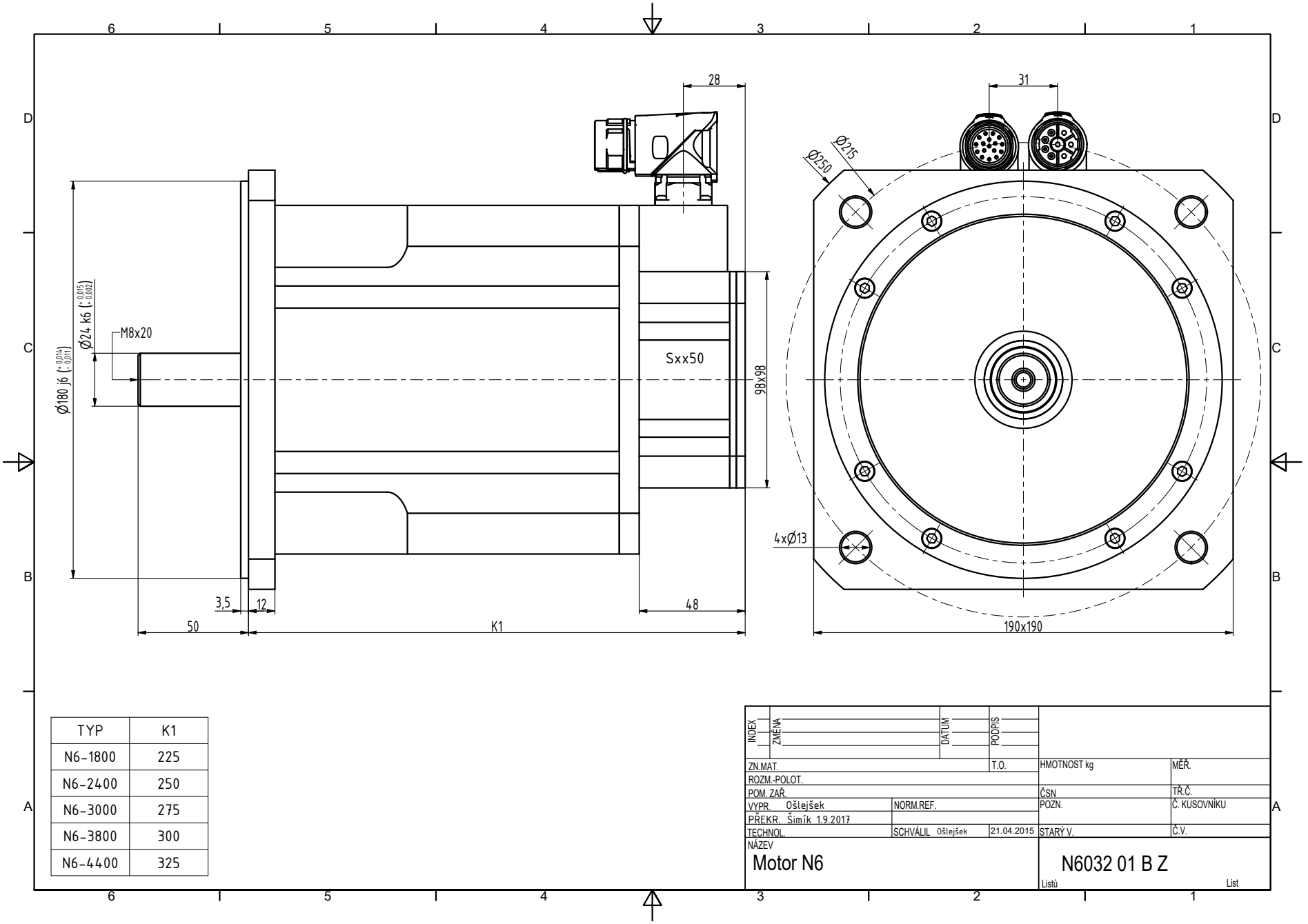

TYP	K1
N6-1800	225
N6-2400	250
N6-3000	275
N6-3800	300
N6-4400	325

INDEX	ZMĚNA	DATUM	PODPIS		
ZN.MAT.			T.O.	HMOTNOST kg	MĚŘ.
ROZM.-POLOT.					
POM. ZAŘ.				ČSN	TŘ.Č.
VYPR. Ošlejšek		NORM.REF.		POZN.	Č. KUSOVNÍKU
PŘEKR. Šimík 1.9.2017					
TECHNOL.		SCHVÁLIL Ošlejšek	21.04.2015	STARÝ V.	Č.V.
NÁZEV	Motor N6			N6032 01 B Z	
				Listů	List