Engineering data (WIN 880)		
DC bus voltage	560	V DC
Nominal AC voltage	380	V AC (rms)
Rated voltage	274	V AC (rms)
Rated power	4.2	kW
Rated speed	2000	rpm
Rated torque	20.00	Nm
Rated current	10.66	A (rms)
Peak torque	72	Nm
Peak current	42.3	A (rms)
Stall torque	24	Nm
Stall current	10.8	A (rms)
No load speed	2830	rpm
EMF constant ±10%	134	V AC (rms) / 1000rpm
Theoretical torque constant ±10%	2.22	Nm / A (rms)
Torque constant ±10% @ rated load	1.88	Nm / A (rms)
Number of poles	10	
Electrical time constant	13.33	ms
Winding terminal resistance	0.81	Ω
Rotary field terminal inductance	10.8	mH

Customs info	
HS Code	85015220

Mechanical data (setting 16)		
Max mechanical speed	6000	rpm
Mech. time constant	0.73	ms
Thermal time constant	47	min
Rotor inertia	25.6	kgcm²
Protection	IP64	
Color	RAL 9005	
Cooling	Convection	
Motor-only mass	18.3	kg
Max. axial force 20kh	156	N
Max. radial force 20kh*	822	N
Max. axial force 100kh	91	N
Max. radial force 100kh*	480	N

** Defined for point of action at ½ output shaft length*

Sensors	
Temperature	PT1000 {PT1000}
Feedback	SRS50 (Hiperface) single-turn, 1024 sin/cos+12bits

Brake		
Braking torque	36.00	Nm
Voltage	24	V DC
Power @20°C	26.0	W
Current @20°C	1.08	A
Inertia	6.20	kgcm²
Mass	2.85	kg

Torque / speed curve

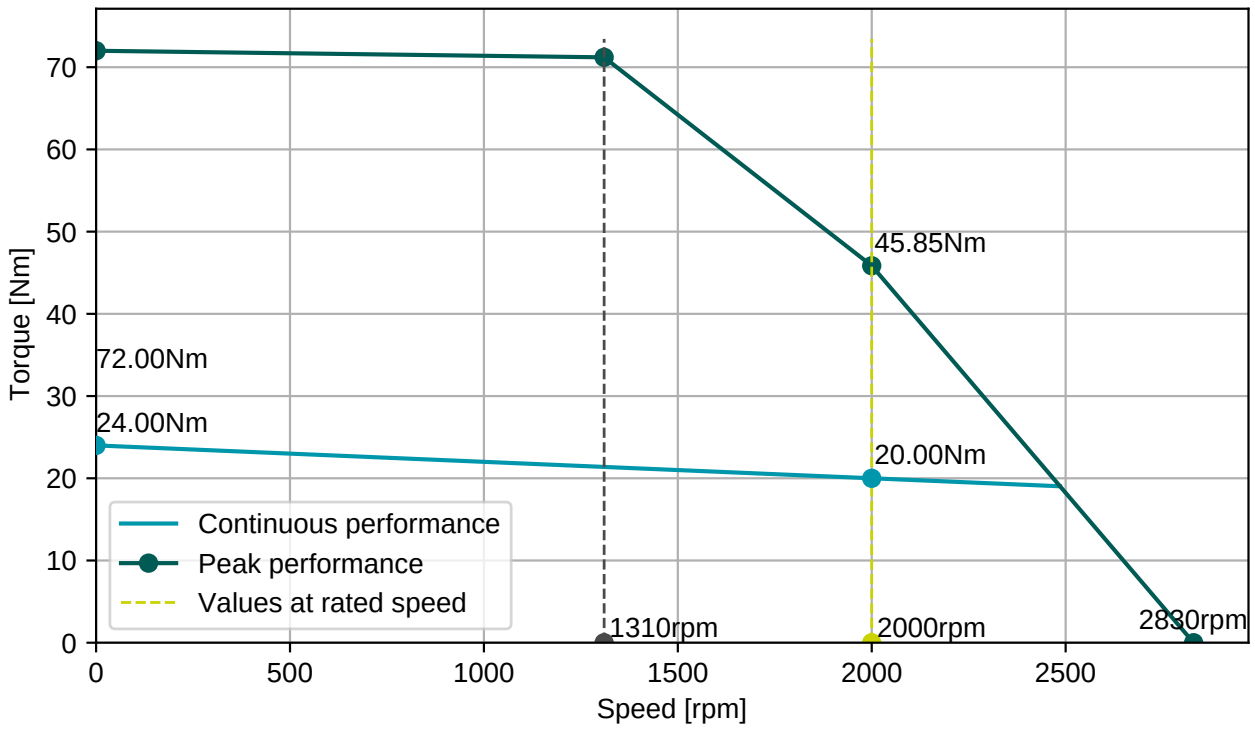

BGC110N00001216000
M23, 8 poles, rotary

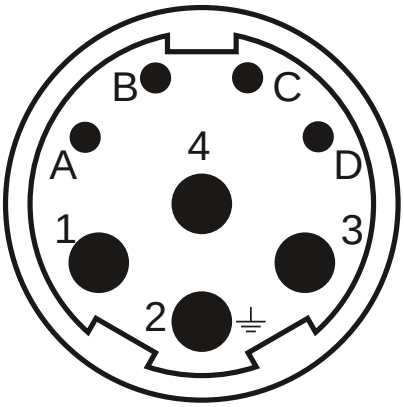

AGC113N00001215000
M23, 17 poles, rotary

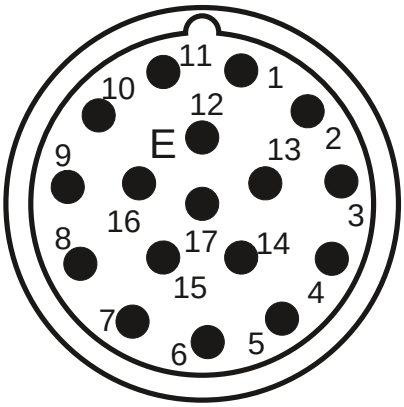

Connector 1 (9)	
1	U
4	V
3	W
2	PE
A	Brake+
B	Brake-
C	
D	

Connector 2 (130)	
1/9	SIN/REFSIN
3/11	COS/REFCOS
5/13	DATA/DATA-
4/2	Us/GND
14/7	Therm

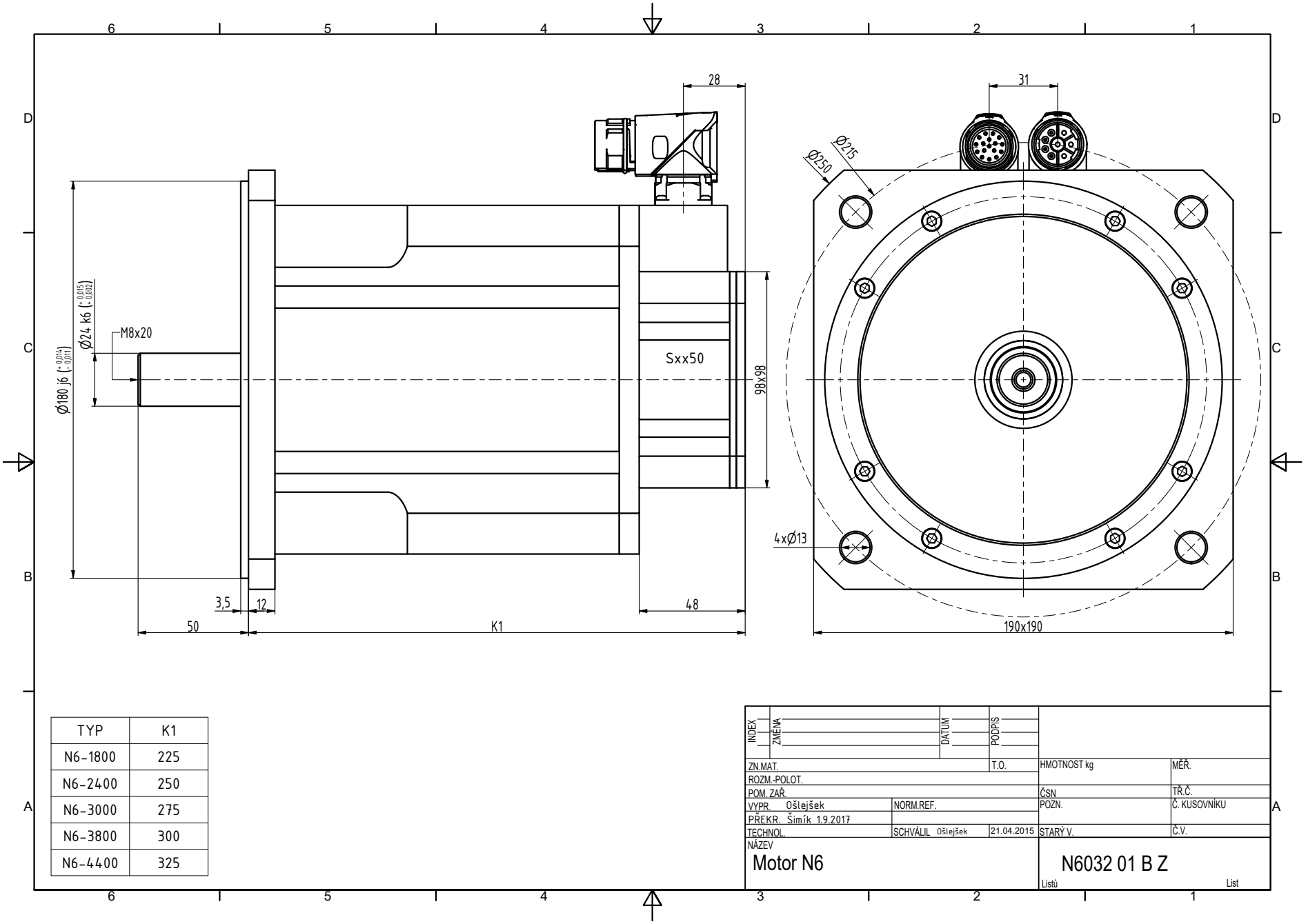

TYP	K1
N6-1800	225
N6-2400	250
N6-3000	275
N6-3800	300
N6-4400	325

INDEX	ZMĚNA	DATUM	PODPIS

ZN.MAT.		T.O.	HMOTNOST kg	MĚŘ.	
ROZM.-POLOT.					
POM. ZAŘ.			ČSN	TŘ.Č.	
VYPR. Ošlejšek	NORM.REF.		POZN.	Č. KUSOVNÍKU	
PŘEKR. Šimík 1.9.2017					
TECHNOL.	SCHVÁLIL Ošlejšek	21.04.2015	STARÝ V.	Č.V.	

NÁZEV
Motor N6

N6032 01 B Z

Listů List