Engineering data (WIN 976)		
DC bus voltage	560	V DC
Nominal AC voltage	380	V AC (rms)
Rated voltage	269	V AC (rms)
Rated power	3.1	kW
Rated speed	2000	rpm
Rated torque	14.80	Nm
Rated current	8.56	A (rms)
Peak torque	51	Nm
Peak current	32.9	A (rms)
Stall torque	18	Nm
Stall current	8.8	A (rms)
No load speed	3080	rpm
EMF constant ±10%	123	V AC (rms) / 1000rpm
Theoretical torque constant ±10%	2.03	Nm / A (rms)
Torque constant ±10% @ rated load	1.73	Nm / A (rms)
Number of poles	10	
Electrical time constant	11.51	ms
Winding terminal resistance	1.19	Ω
Rotary field terminal inductance	13.7	mH

Customs info	
HS Code	85015220

Mechanical data (setting 16)		
Max mechanical speed	6000	rpm
Mech. time constant	0.92	ms
Thermal time constant	42	min
Rotor inertia	18.5	kgcm²
Protection	IP64	
Color	RAL 9005	
Cooling	Convection	
Motor-only mass	13.7	kg
Max. axial force 20kh	152	N
Max. radial force 20kh*	800	N
Max. axial force 100kh	89	N
Max. radial force 100kh*	468	N

** Defined for point of action at ½ output shaft length*

Sensors	
Temperature	PT1000 {PT1000}
Feedback	SRS50 (Hiperface) single-turn, 1024 sin/cos+12bits

Brake		
Braking torque	36.00	Nm
Voltage	24	V DC
Power @20°C	26.0	W
Current @20°C	1.08	A
Inertia	6.20	kgcm²
Mass	2.85	kg

Torque / speed curve

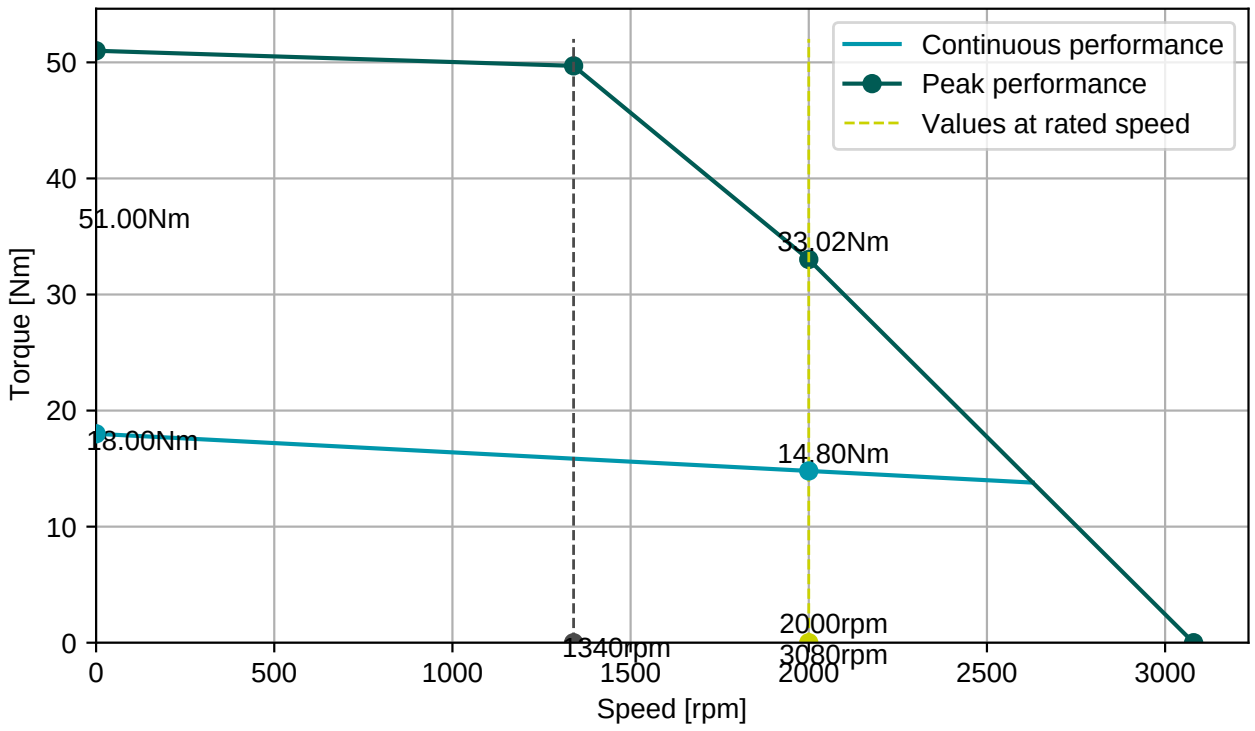

BGC110N00001216000
M23, 8 poles, rotary

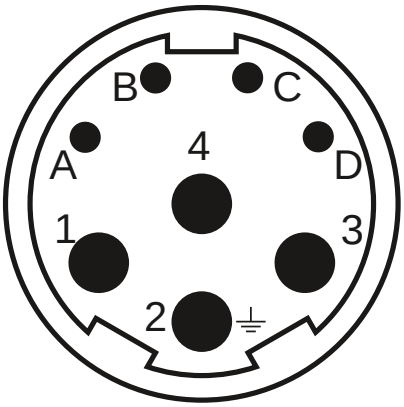

AGC113N00001215000
M23, 17 poles, rotary

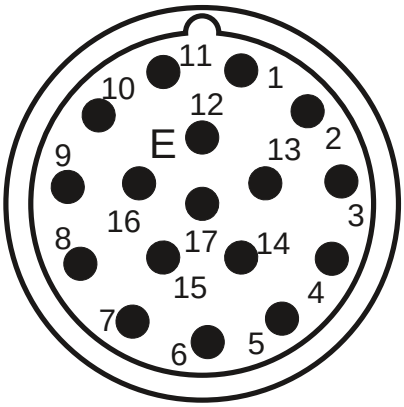

Connector 1 (9)	
1	U
4	V
3	W
2	PE
A	Brake+
B	Brake-
C	
D	

Connector 2 (130)	
1/9	SIN/REFSIN
3/11	COS/REFCOS
5/13	DATA/DATA-
4/2	Us/GND
14/7	Therm

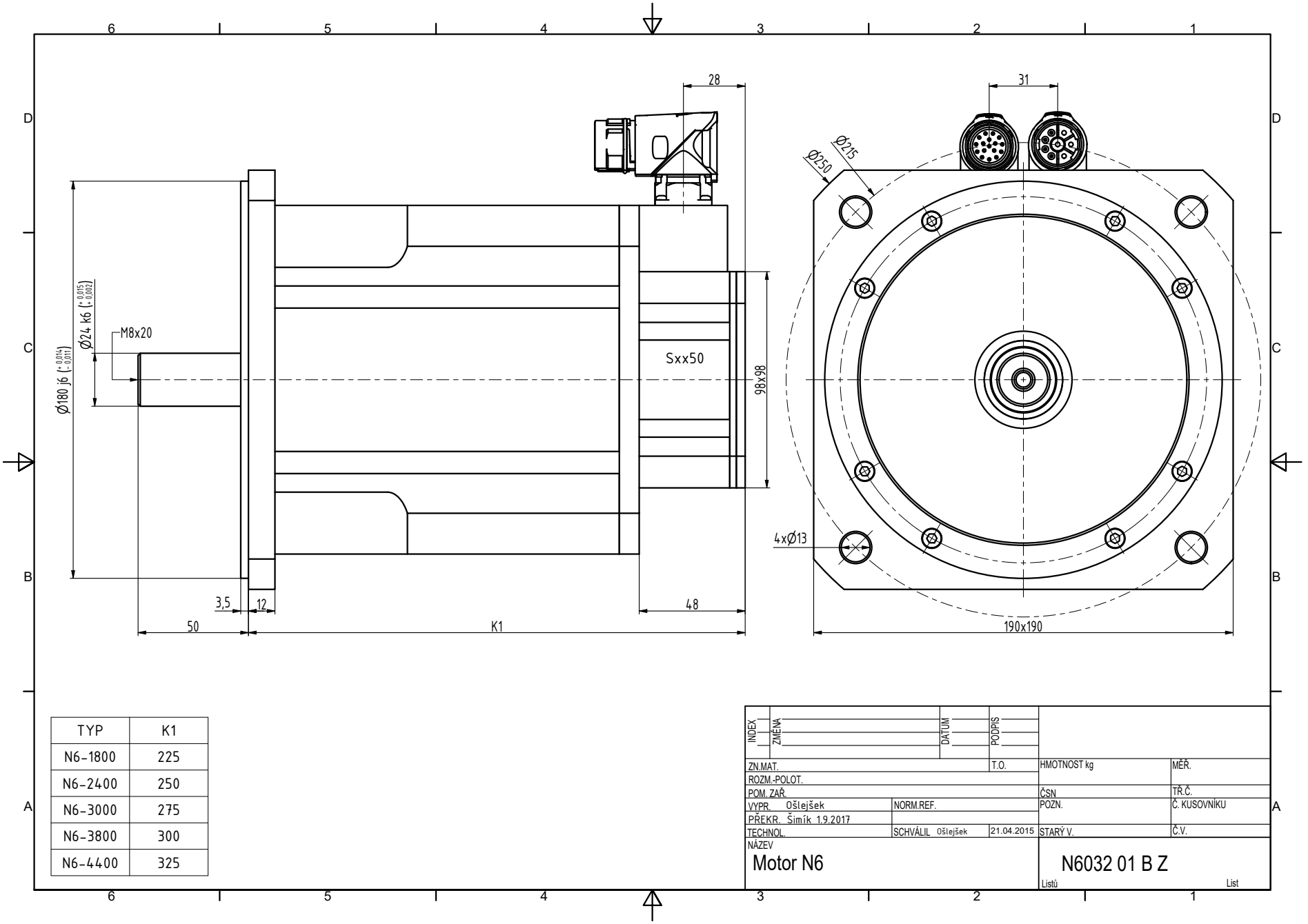

TYP	K1
N6-1800	225
N6-2400	250
N6-3000	275
N6-3800	300
N6-4400	325

INDEX	ZMĚNA	DATUM	PODPIS

ZN.MAT.		T.O.	HMOTNOST kg	MĚŘ.
ROZM.-POLOT.				
POM. ZAŘ.			ČSN	TŘ.Č.
VYPR. Ošlejšek	NORM.REF.		POZN.	Č. KUSOVNÍKU
PŘEKR. Šimík 1.9.2017				
TECHNOL.	SCHVÁLIL Ošlejšek	21.04.2015	STARÝ V.	Č.V.

NÁZEV
Motor N6

N6032 01 B Z

Listů List