| Engineering data (WIN 960) | | |
|---|---|---|
| DC bus voltage | 320 | V DC |
| Nominal AC voltage | 220 | V AC (rms) |
| Rated voltage | 154 | V AC (rms) |
| Rated power | 518 | W |
| Rated speed | 4500 | rpm |
| Rated torque | 1.10 | Nm |
| Rated current | 2.94 | A (rms) |
| Peak torque | 3.45 | Nm |
| Peak current | 11.1 | A (rms) |
| Stall torque | 1.15 | Nm |
| Stall current | 2.53 | A (rms) |
| No load speed | 7940 | rpm |
| EMF constant ±10% | 27.5 | V AC (rms) / 1000rpm |
| Theoretical torque constant ±10% | 0.45 | Nm / A (rms) |
| Torque constant ±10% @ rated load | 0.37 | Nm / A (rms) |
| Number of poles | 10 | |
| Electrical time constant | 2.23 | ms |
| Winding terminal resistance | 5.37 | Ω |
| Rotary field terminal inductance | 12 | mH |

| Customs info | |
|---|---|
| HS Code | 85015100 |

| Mechanical data (setting 16) | | |
|---|---|---|
| Max mechanical speed | 12000 | rpm |
| Mech. time constant | 1.39 | ms |
| Thermal time constant | 21 | min |
| Rotor inertia | 0.31 | kgcm² |
| Protection | IP64 | |
| Color | RAL 9005 | |
| Cooling | Convection | |
| Motor-only mass | 1.5 | kg |
| Max. axial force 20kh | 47 | N |
| Max. radial force 20kh* | 247 | N |
| Max. axial force 100kh | 27 | N |
| Max. radial force 100kh* | 145 | N |

** Defined for point of action at ½ output shaft length*

| Sensors | |
|---|---|
| Temperature | PT1000 {PT1000} |
| Feedback | SRS50 (Hiperface) single-turn, 1024 sin/cos+12bits |

Torque / speed curve

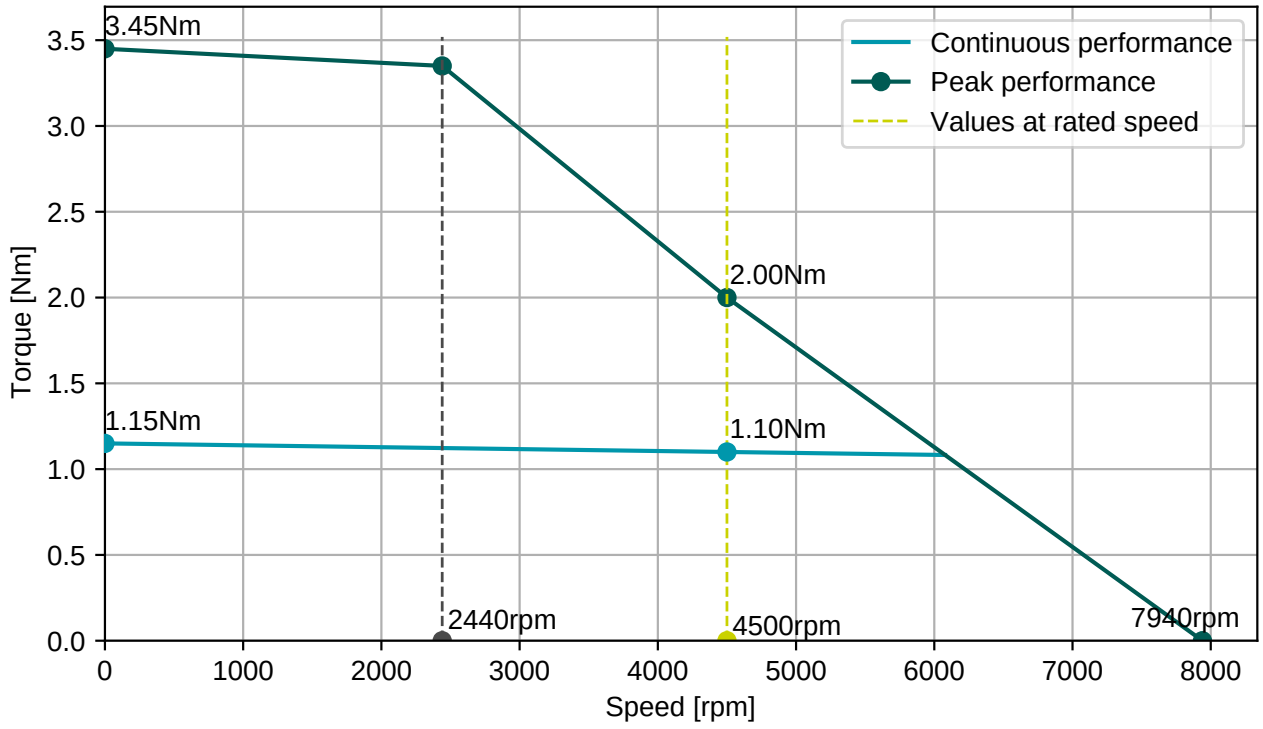


**BGC110N00001216000**
M23, 8 poles, rotary

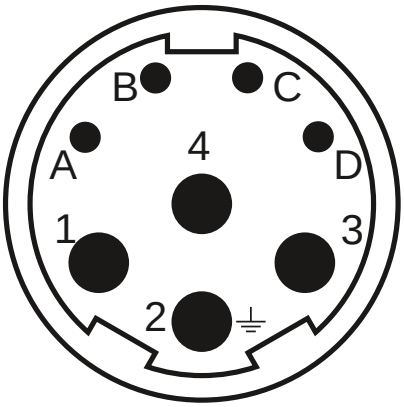


**AGC113N00001215000**
M23, 17 poles, rotary

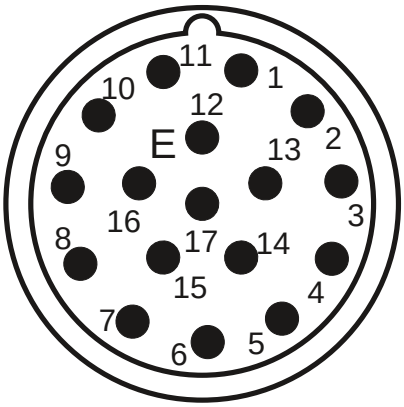


| Connector 1 (9) | |
|---|---|
| **1** | U |
| **4** | V |
| **3** | W |
| **2** | PE |
| **A** | Brake+ |
| **B** | Brake- |
| **C** | |
| **D** | |

| Connector 2 (130) | |
|---|---|
| **1/9** | SIN/REFSIN |
| **3/11** | COS/REFCOS |
| **5/13** | DATA/DATA- |
| **4/2** | Us/GND |
| **14/7** | Therm |

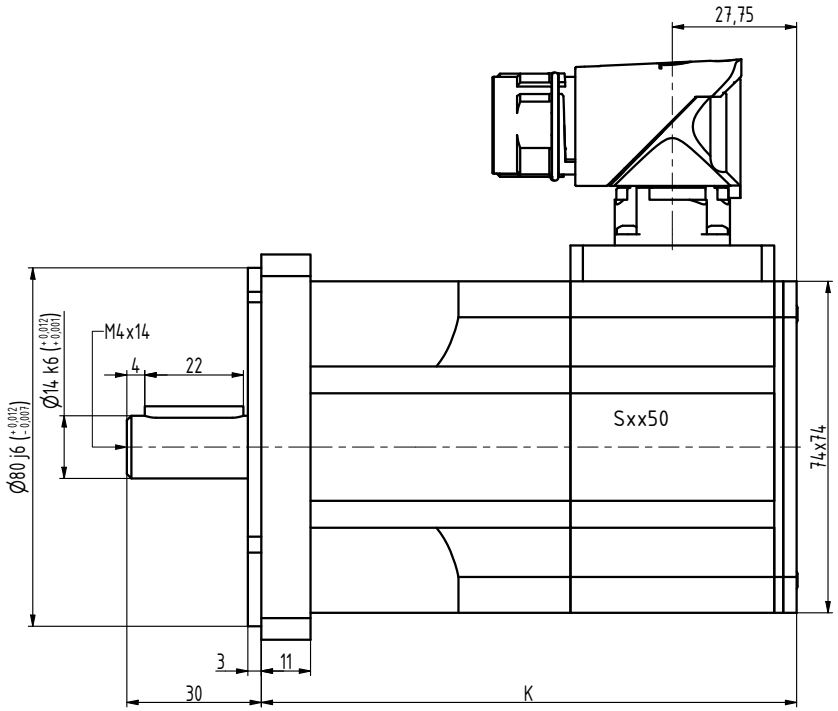


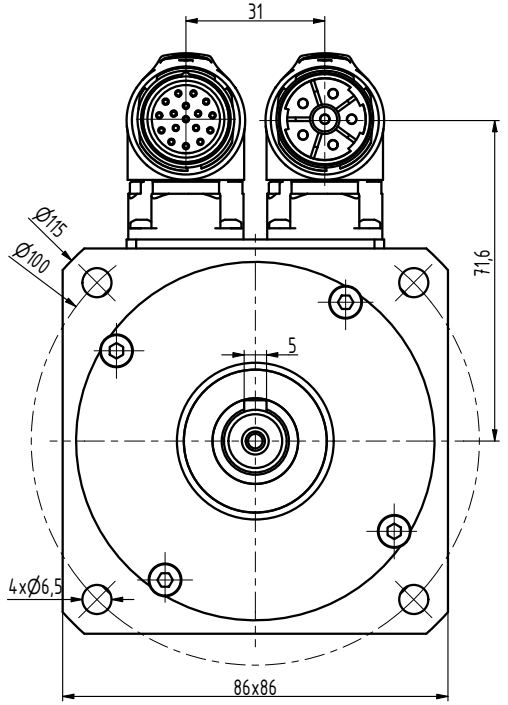


| TYP | K |
|---|---|
| N3-0115 | 101,5 |
| N3-0205 | 119,5 |
| N3-0280 | 137,5 |
| N3-0350 | 155,5 |
| N3-0420 | 173,5 |
| N3-0480 | 191,5 |

| INDEX | ZMĚNA | DATUM | PODPIS | | |
|---|---|---|---|---|---|
| ZN.MAT. | | | T.O. | HMOTNOST kg | MĚŘ. |
| ROZM.-POLOT. | | | | | |
| POM. ZAŘ. | | | | ČSN | TŘ.Č. |
| VYPR. Šimík | | NORM.REF. | | POZN. | Č. KUSOVNÍKU |
| PŘEKR. Šimík 22.10.2018 | | | | | |
| TECHNOL. | | SCHVÁLIL Ošlejšek | 22.01.2015 | STARÝ V. | Č.V. |
| NÁZEV | | | | | |
| Motor N3 | | | | N3120 00 P Z | |
| | | | | Listů | List |