Engineering data (WIN 778)		
DC bus voltage	36	V DC
Nominal AC voltage	23	V AC (rms)
Rated voltage	16	V AC (rms)
Rated power	181	W
Rated speed	1500	rpm
Rated torque	1.15	Nm
Rated current	11.25	A (rms)
Peak torque	3.45	Nm
Peak current	44.2	A (rms)
Stall torque	1.15	Nm
Stall current	10	A (rms)
No load speed	3270	rpm
EMF constant ±10%	6.9	V AC (rms) / 1000rpm
Theoretical torque constant ±10%	0.11	Nm / A (rms)
Torque constant ±10% @ rated load	0.10	Nm / A (rms)
Number of poles	10	
Electrical time constant	2.21	ms
Winding terminal resistance	0.34	Ω
Rotary field terminal inductance	0.75	mH

Customs info	
HS Code	85015100

Mechanical data (setting 16)		
Max mechanical speed	12000	rpm
Mech. time constant	1.40	ms
Thermal time constant	21	min
Rotor inertia	0.31	kgcm²
Protection	IP64	
Color	RAL 9005	
Cooling	Convection	
Motor-only mass	1.5	kg
Max. axial force 20kh	68	N
Max. radial force 20kh*	357	N
Max. axial force 100kh	40	N
Max. radial force 100kh*	209	N

** Defined for point of action at ½ output shaft length*

Sensors	
Temperature	PT1000 {PT1000}
Feedback	SRM50 (Hiperface) multi-turn, 1024 sin/cos+12bits

Torque / speed curve

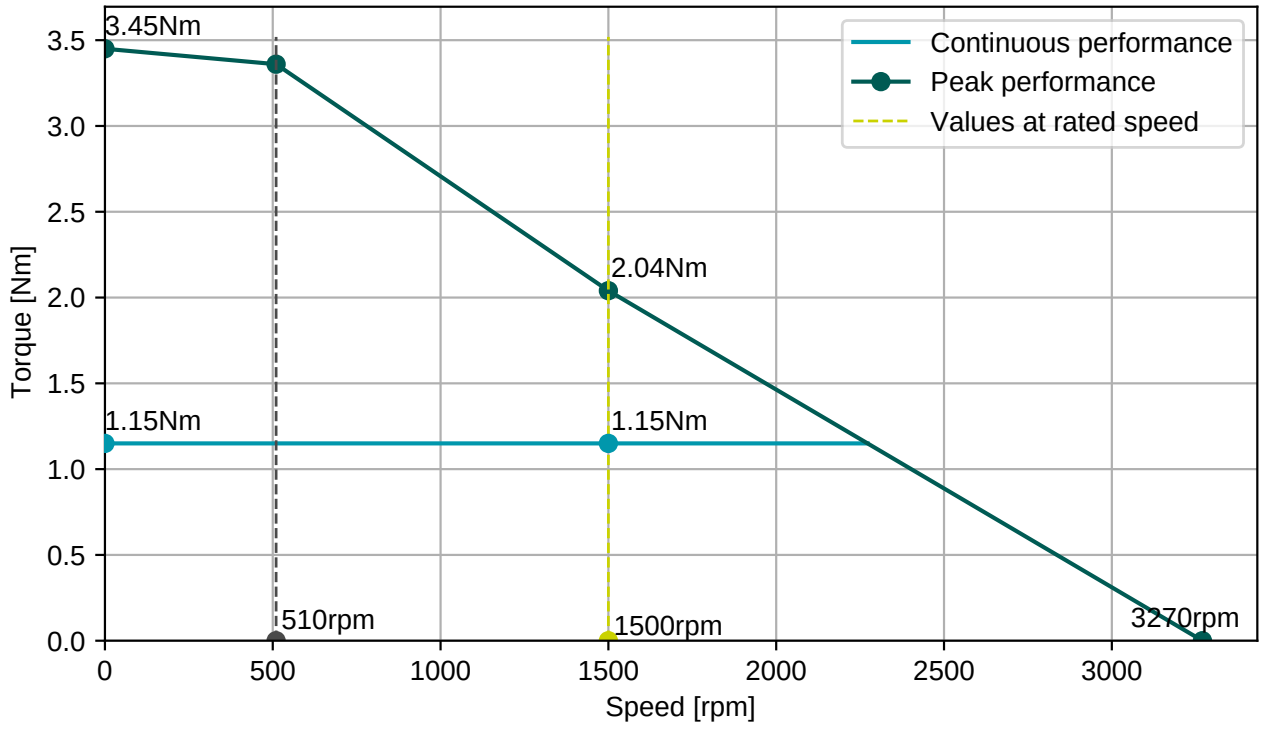

BGC110N00001216000
M23, 8 poles, rotary

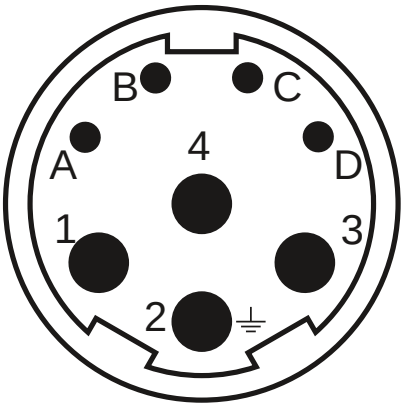

AGC113N00001215000
M23, 17 poles, rotary

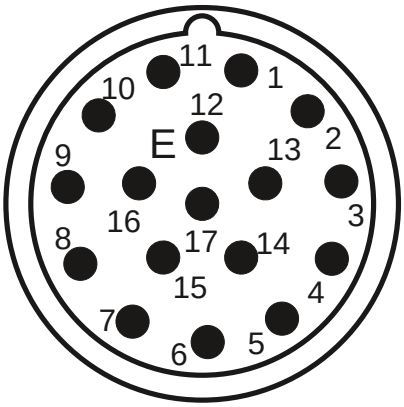

Connector 1 (9)	
1	U
4	V
3	W
2	PE
A	Brake+
B	Brake-
C	
D	

Connector 2 (130)	
1/9	SIN/REFSIN
3/11	COS/REFCOS
5/13	DATA/DATA-
4/2	Us/GND
14/7	Therm

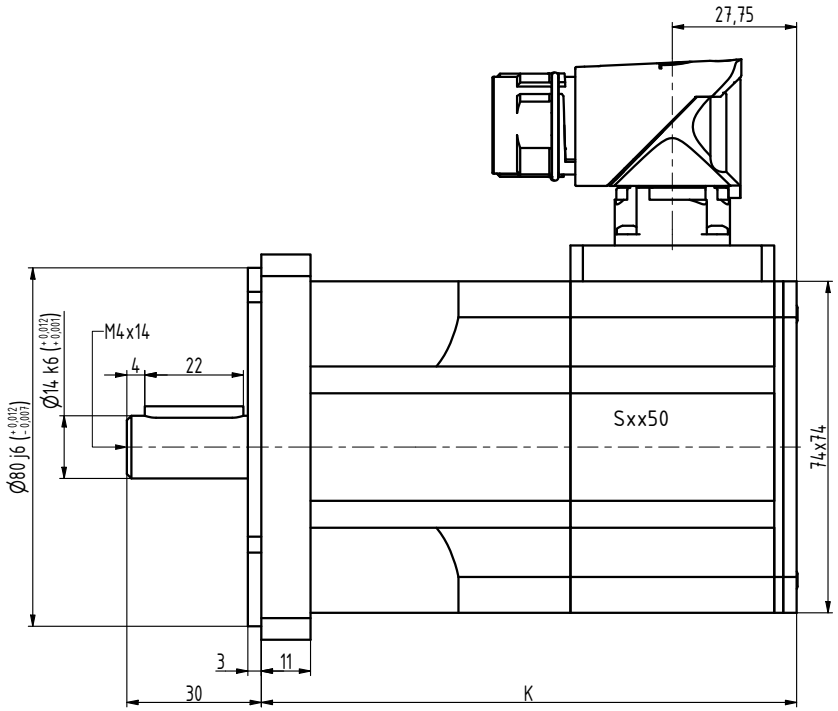

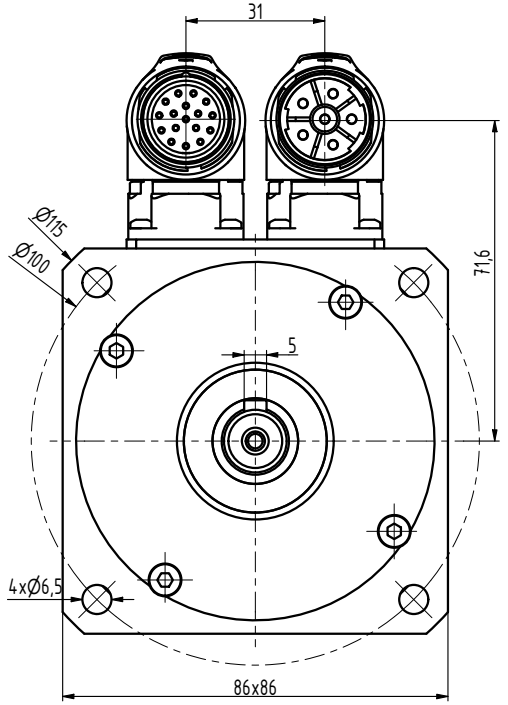

TYP	K
N3-0115	101,5
N3-0205	119,5
N3-0280	137,5
N3-0350	155,5
N3-0420	173,5
N3-0480	191,5

INDEX	ZMĚNA	DATUM	PODPIS		
ZN.MAT.			T.O.	HMOTNOST kg	MĚŘ.
ROZM.-POLOT.					
POM. ZAŘ.				ČSN	TŘ.Č.
VYPR. Šimík		NORM.REF.		POZN.	Č. KUSOVNÍKU
PŘEKR. Šimík 22.10.2018					
TECHNOL.		SCHVÁLIL Ošlejšek	22.01.2015	STARÝ V.	Č.V.
NÁZEV					
Motor N3				N3120 00 P Z	
				Listů	List