Engineering data (WIN 704)		
DC bus voltage	320	V DC
Nominal AC voltage	220	V AC (rms)
Rated voltage	153	V AC (rms)
Rated power	597	W
Rated speed	3000	rpm
Rated torque	1.90	Nm
Rated current	3.06	A (rms)
Peak torque	6.15	Nm
Peak current	12.7	A (rms)
Stall torque	2.05	Nm
Stall current	2.79	A (rms)
No load speed	4920	rpm
EMF constant ±10%	44.5	V AC (rms) / 1000rpm
Theoretical torque constant ±10%	0.74	Nm / A (rms)
Torque constant ±10% @ rated load	0.62	Nm / A (rms)
Number of poles	10	
Electrical time constant	2.53	ms
Winding terminal resistance	5.26	Ω
Rotary field terminal inductance	13.3	mH

Customs info	
HS Code	85015100

Mechanical data (setting 16)		
Max mechanical speed	12000	rpm
Mech. time constant	0.92	ms
Thermal time constant	23	min
Rotor inertia	0.55	kgcm²
Protection	IP64	
Color	RAL 9005	
Cooling	Convection	
Motor-only mass	2.5	kg
Max. axial force 20kh	64	N
Max. radial force 20kh*	335	N
Max. axial force 100kh	37	N
Max. radial force 100kh*	196	N

** Defined for point of action at ½ output shaft length*

Sensors	
Temperature	PT1000 {PT1000}
Feedback	SRM50 (Hiperface) multi-turn, 1024 sin/cos+12bits

Brake		
Braking torque	4.50	Nm
Voltage	24	V DC
Power @20°C	12.0	W
Current @20°C	0.50	A
Inertia	0.20	kgcm²
Mass	0.47	kg

Torque / speed curve

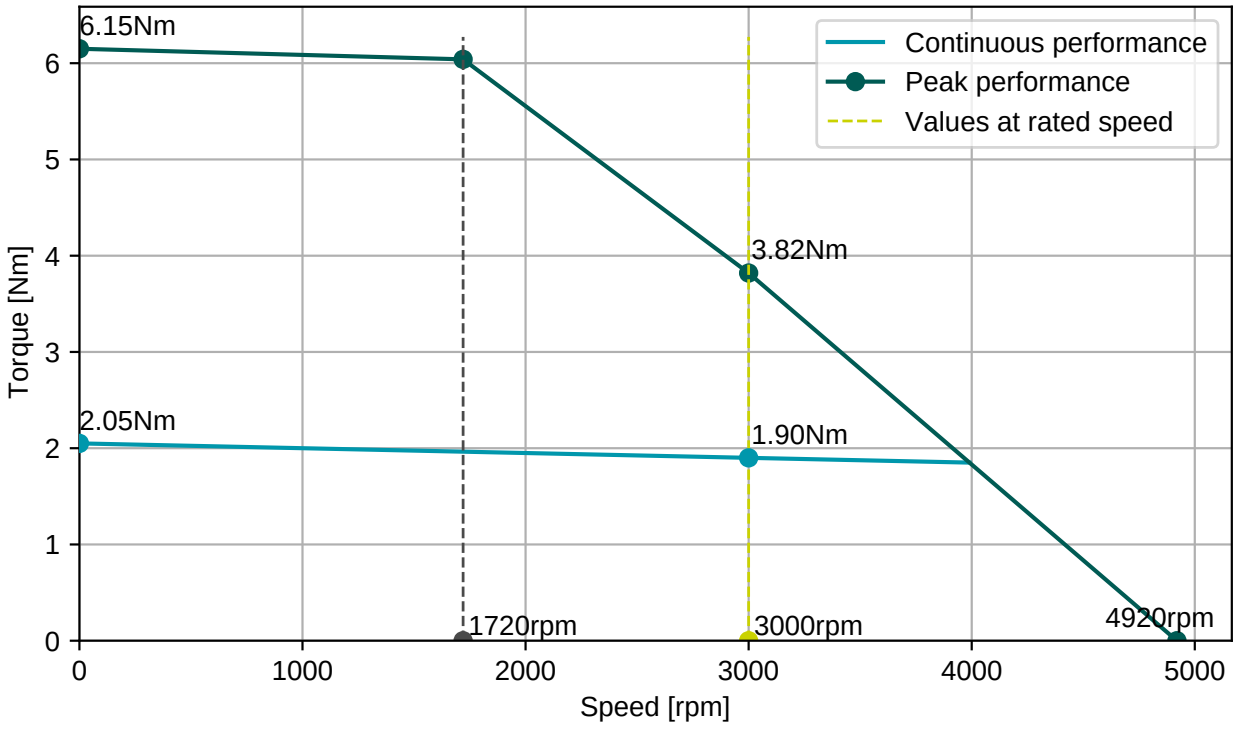

BGC110N00001216000
M23, 8 poles, rotary

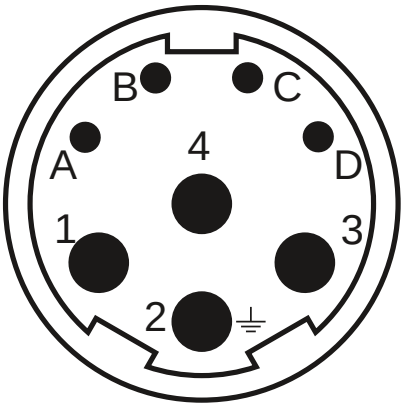

AGC113N00001215000
M23, 17 poles, rotary

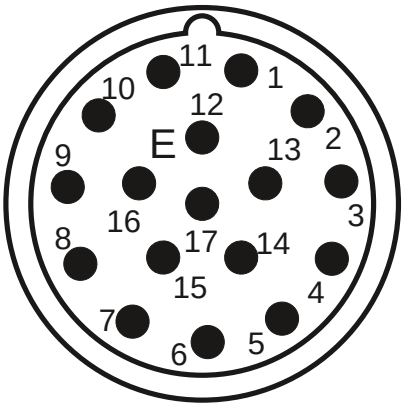

Connector 1 (9)	
1	U
4	V
3	W
2	PE
A	Brake+
B	Brake-
C	
D	

Connector 2 (130)	
1/9	SIN/REFSIN
3/11	COS/REFCOS
5/13	DATA/DATA-
4/2	Us/GND
14/7	Therm

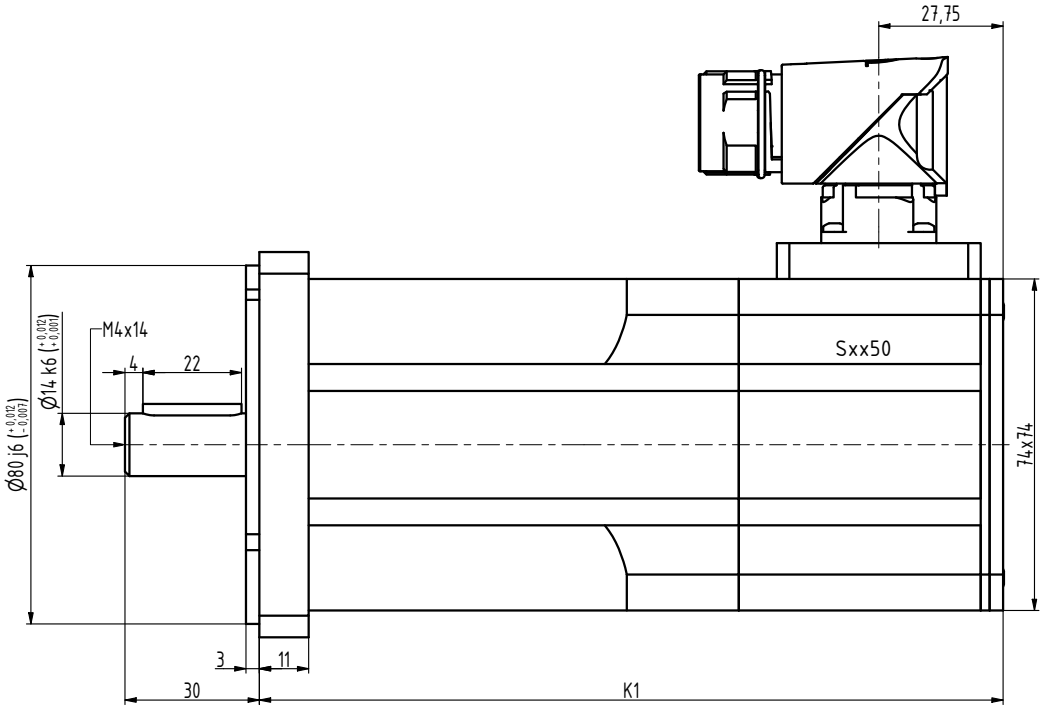

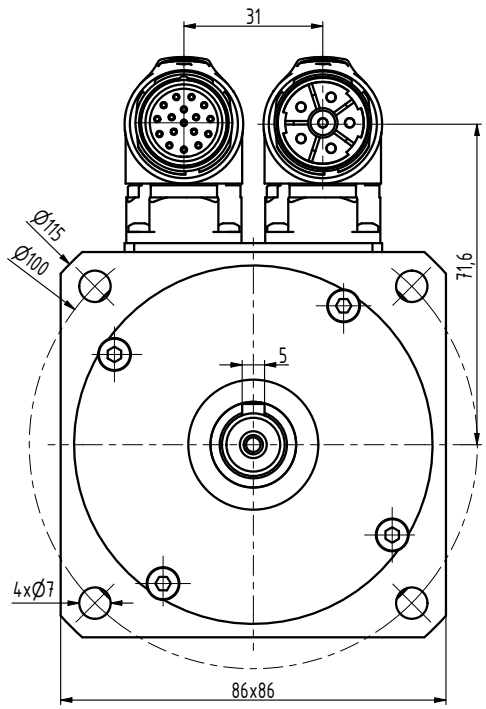

TYP	K1
N3-0115	148
N3-0205	166
N3-0280	184
N3-0350	202
N3-0420	220
N3-0480	238

INDEX	ZMĚNA	DATUM	PODPIS		
ZN.MAT.			T.O.	HMOTNOST kg	MĚŘ.
ROZM.-POLOT.					
POM. ZAŘ.				ČSN	TŘ.Č.
VYPR. Ošlejšek		NORM.REF.		POZN.	Č. KUSOVNÍKU
PŘEKR. Šimík 22.10.2018					
TECHNOL.		SCHVÁLIL Ošlejšek	03.12.2009	STARÝ V.	Č.V.
NÁZEV	Motor N3			N3120 00 BP Z	
				Listů	List