Engineering data (WIN 726)		
DC bus voltage	560	V DC
Nominal AC voltage	380	V AC (rms)
Rated voltage	265	V AC (rms)
Rated power	872	W
Rated speed	4500	rpm
Rated torque	1.85	Nm
Rated current	2.56	A (rms)
Peak torque	6.15	Nm
Peak current	9.1	A (rms)
Stall torque	2.05	Nm
Stall current	2.25	A (rms)
No load speed	6880	rpm
EMF constant ±10%	55	V AC (rms) / 1000rpm
Theoretical torque constant ±10%	0.91	Nm / A (rms)
Torque constant ±10% @ rated load	0.72	Nm / A (rms)
Number of poles	10	
Electrical time constant	2.51	ms
Winding terminal resistance	8.2	Ω
Rotary field terminal inductance	20.6	mH

Customs info	
HS Code	85015220

Mechanical data (setting 16)		
Max mechanical speed	12000	rpm
Mech. time constant	0.94	ms
Thermal time constant	23	min
Rotor inertia	0.55	kgcm²
Protection	IP64	
Color	RAL 9005	
Cooling	Convection	
Motor-only mass	2.5	kg
Max. axial force 20kh	56	N
Max. radial force 20kh*	293	N
Max. axial force 100kh	33	N
Max. radial force 100kh*	171	N

** Defined for point of action at ½ output shaft length*

Sensors	
Temperature	PT1000 {PT1000}
Feedback	SRM50 (Hiperface) multi-turn, 1024 sin/cos+12bits

Brake		
Braking torque	4.50	Nm
Voltage	24	V DC
Power @20°C	12.0	W
Current @20°C	0.50	A
Inertia	0.20	kgcm²
Mass	0.47	kg

Torque / speed curve

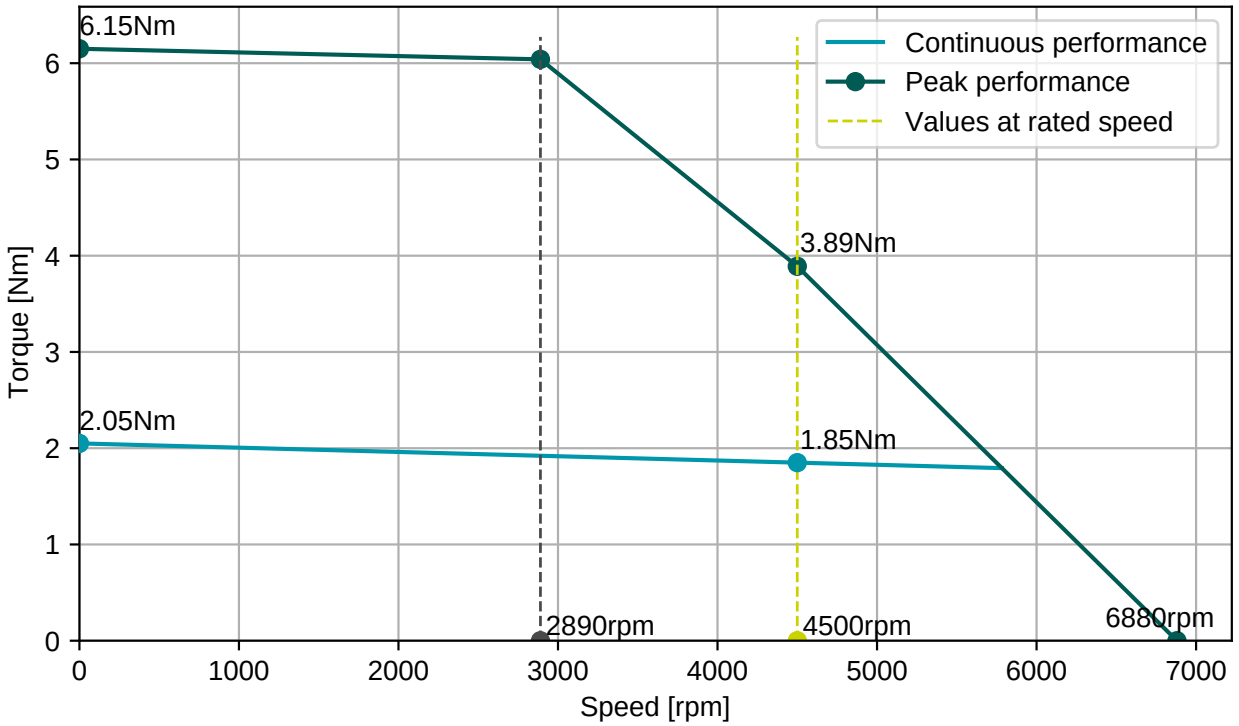

BGC110N00001216000
M23, 8 poles, rotary

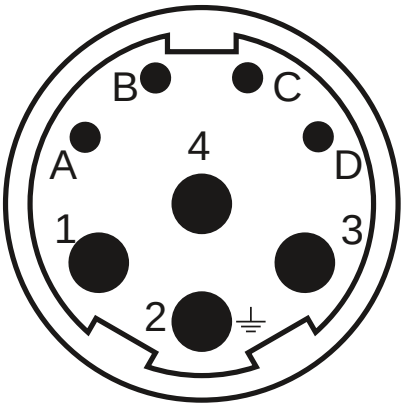

AGC113N00001215000
M23, 17 poles, rotary

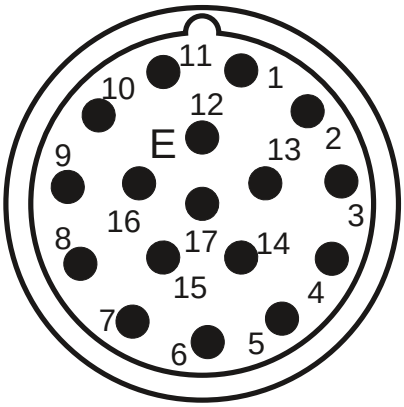

Connector 1 (9)	
1	U
4	V
3	W
2	PE
A	Brake+
B	Brake-
C	
D	

Connector 2 (130)	
1/9	SIN/REFSIN
3/11	COS/REFCOS
5/13	DATA/DATA-
4/2	Us/GND
14/7	Therm

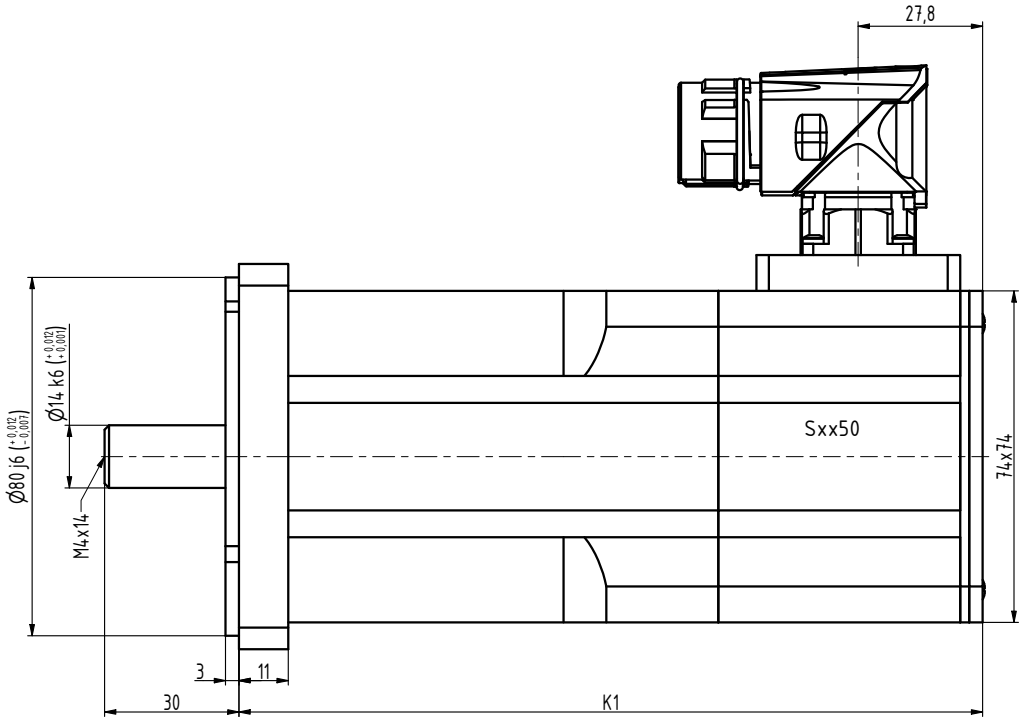

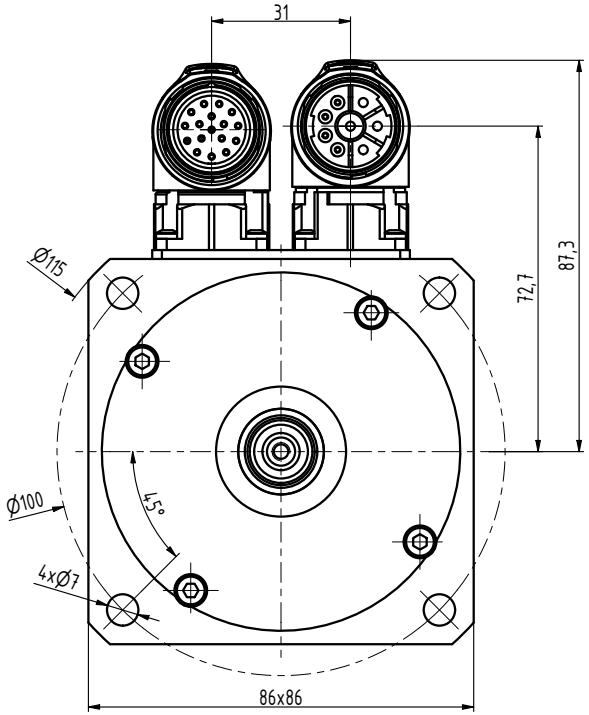

TYP	K1
N3-0115	148
N3-0205	166
N3-0280	184
N3-0350	202
N3-0420	220
N3-0480	238

INDEX	ZMĚNA	DATUM	PODPIS		
ZN.MAT.			T.O.	HMOTNOST kg	MĚŘ.
ROZM.-POLOT.					
POM. ZAŘ.				ČSN	TŘ.Č.
VYPR. Ošlejšek		NORM.REF.		POZN.	Č. KUSOVNÍKU
PŘEKR. Ošlejšek 30.05.2021					
TECHNOL.		SCHVÁLIL Ošlejšek	08.12.2009	STARÝ V.	Č.V.

NÁZEV
Motor N3

N3120 00 B Z_S4_S1

Listů List