| Engineering data (WIN 816) | | |
|---|---|---|
| DC bus voltage | 560 | V DC |
| Nominal AC voltage | 380 | V AC (rms) |
| Rated voltage | 266 | V AC (rms) |
| Rated power | 2.8 | kW |
| Rated speed | 3000 | rpm |
| Rated torque | 8.80 | Nm |
| Rated current | 7.41 | A (rms) |
| Peak torque | 33.9 | Nm |
| Peak current | 27.9 | A (rms) |
| Stall torque | 11.3 | Nm |
| Stall current | 7.5 | A (rms) |
| No load speed | 4170 | rpm |
| EMF constant ±10% | 91 | V AC (rms) / 1000rpm |
| Theoretical torque constant ±10% | 1.51 | Nm / A (rms) |
| Torque constant ±10% @ rated load | 1.19 | Nm / A (rms) |
| Number of poles | 10 | |
| Electrical time constant | 6.27 | ms |
| Winding terminal resistance | 1.42 | Ω |
| Rotary field terminal inductance | 8.9 | mH |

| Customs info | |
|---|---|
| HS Code | 85015220 |

| Mechanical data (setting 16) | | |
|---|---|---|
| Max mechanical speed | 9000 | rpm |
| Mech. time constant | 0.62 | ms |
| Thermal time constant | 40 | min |
| Rotor inertia | 5.7 | kgcm² |
| Protection | IP64 | |
| Color | RAL 9005 | |
| Cooling | Convection | |
| Motor-only mass | 7.7 | kg |
| Max. axial force 20kh | 135 | N |
| Max. radial force 20kh* | 713 | N |
| Max. axial force 100kh | 79 | N |
| Max. radial force 100kh* | 417 | N |

** Defined for point of action at ½ output shaft length*

| Sensors | |
|---|---|
| Temperature | PT1000 {PT1000} |
| Feedback | SRS50 (Hiperface) single-turn, 1024 sin/cos+12bits |

Torque / speed curve

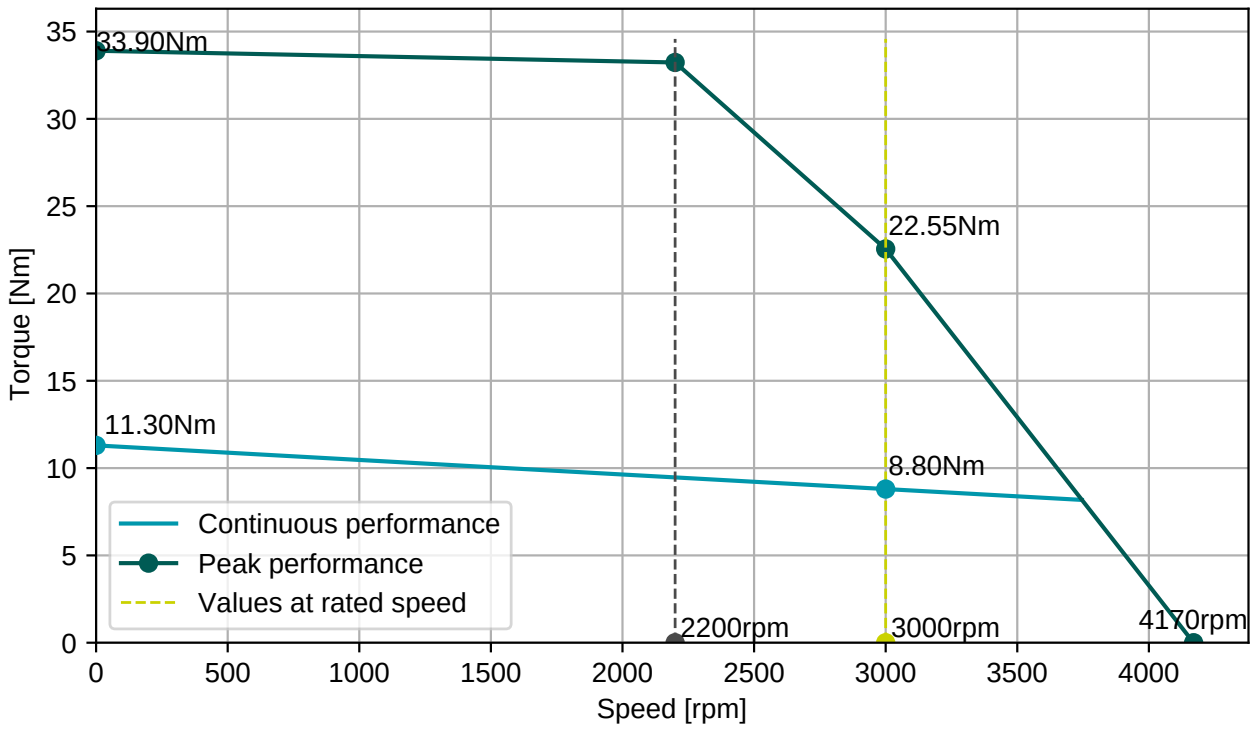


**BGC110N00001216000**
M23, 8 poles, rotary

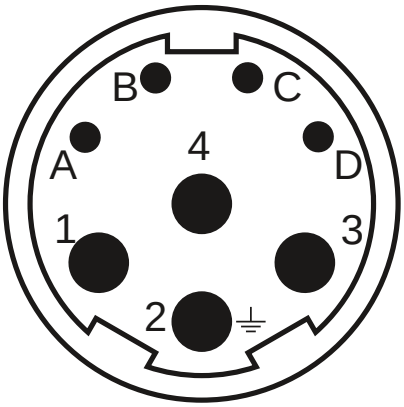


**AGC113N00001215000**
M23, 17 poles, rotary

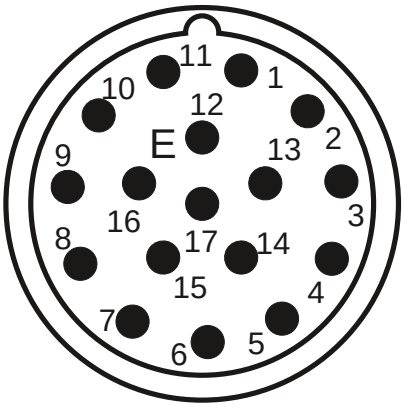


| Connector 1 (9) | |
|---|---|
| **1** | U |
| **4** | V |
| **3** | W |
| **2** | PE |
| **A** | Brake+ |
| **B** | Brake- |
| **C** | |
| **D** | |

| Connector 2 (130) | |
|---|---|
| **1/9** | SIN/REFSIN |
| **3/11** | COS/REFCOS |
| **5/13** | DATA/DATA- |
| **4/2** | Us/GND |
| **14/7** | Therm |

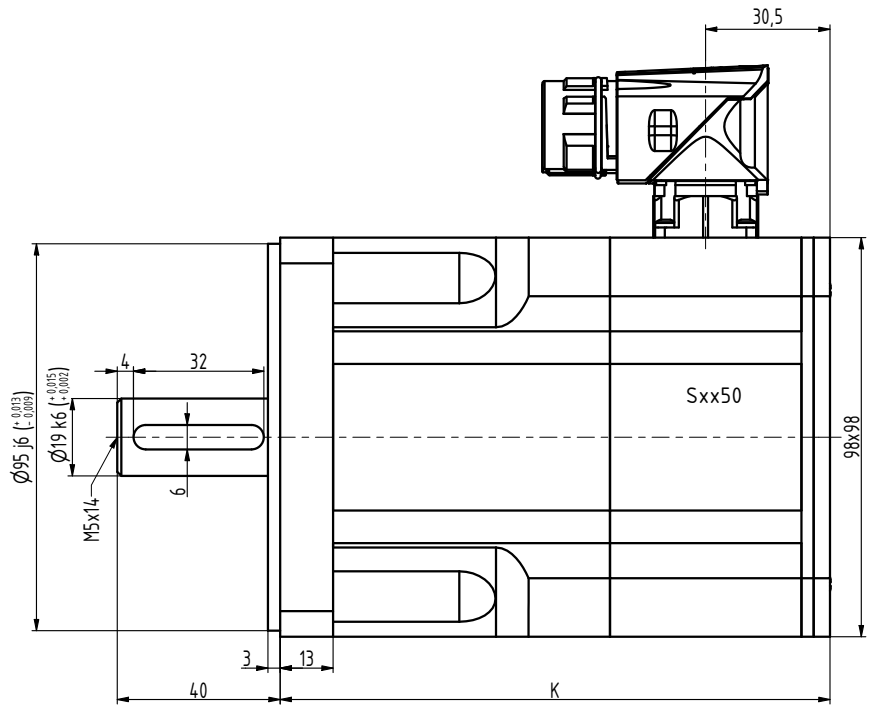


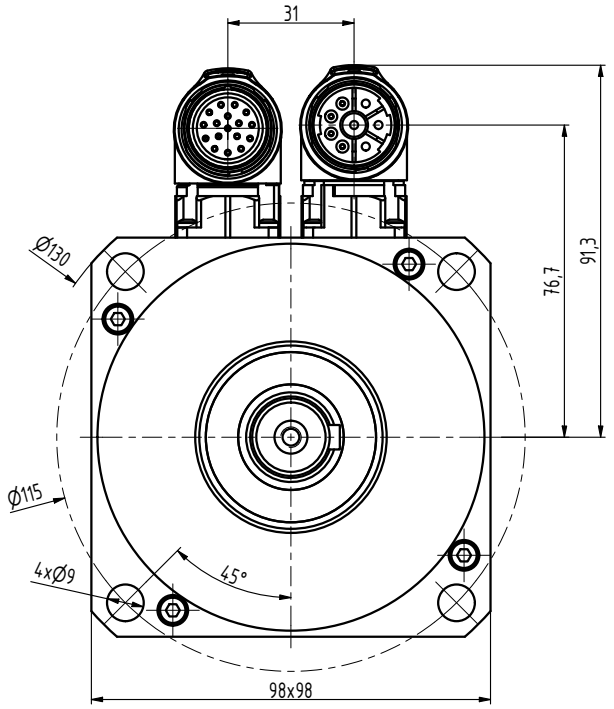


| TYP | K |
|---|---|
| N4-0340 | 120 |
| N4-0510 | 135 |
| N4-0750 | 165 |
| N4-0960 | 195 |
| N4-1130 | 225 |

| INDEX | ZMĚNA | DATUM | PODPIS | | |
|---|---|---|---|---|---|
| ZN.MAT. | | | T.O. | HMOTNOST kg | MĚŘ. |
| ROZM.-POLOT. | | | | | |
| POM. ZAŘ. | | | | ČSN | TŘ.Č. |
| VYPR. Ošlejšek | | NORM.REF. | | POZN. | Č. KUSOVNÍKU |
| PŘEKR. | | | | | |
| TECHNOL. | | SCHVÁLIL Ošlejšek | 20.07.2021 | STARÝ V. | Č.V. |
| NÁZEV | Motor N4 | | | N4095 00 P Z_S4_S1 | |
| | | | | Listů | List |