Engineering data (WIN 708)		
DC bus voltage	320	V DC
Nominal AC voltage	220	V AC (rms)
Rated voltage	155	V AC (rms)
Rated power	1.3	kW
Rated speed	3000	rpm
Rated torque	4.20	Nm
Rated current	7.01	A (rms)
Peak torque	15.3	Nm
Peak current	31	A (rms)
Stall torque	5.1	Nm
Stall current	6.8	A (rms)
No load speed	4800	rpm
EMF constant ±10%	45.5	V AC (rms) / 1000rpm
Theoretical torque constant ±10%	0.75	Nm / A (rms)
Torque constant ±10% @ rated load	0.60	Nm / A (rms)
Number of poles	10	
Electrical time constant	5.48	ms
Winding terminal resistance	1.24	Ω
Rotary field terminal inductance	6.8	mH

Customs info	
HS Code	85015220

Mechanical data (setting 16)		
Max mechanical speed	9000	rpm
Mech. time constant	0.77	ms
Thermal time constant	25	min
Rotor inertia	2.04	kgcm²
Protection	IP64	
Color	RAL 9005	
Cooling	Convection	
Motor-only mass	3.8	kg
Max. axial force 20kh	116	N
Max. radial force 20kh*	611	N
Max. axial force 100kh	68	N
Max. radial force 100kh*	357	N

** Defined for point of action at ½ output shaft length*

Sensors	
Temperature	PT1000 {PT1000}
Feedback	SRS50 (Hiperface) single-turn, 1024 sin/cos+12bits

Brake		
Braking torque	9.00	Nm
Voltage	24	V DC
Power @20°C	18.0	W
Current @20°C	0.75	A
Inertia	0.60	kgcm²
Mass	0.82	kg

Torque / speed curve

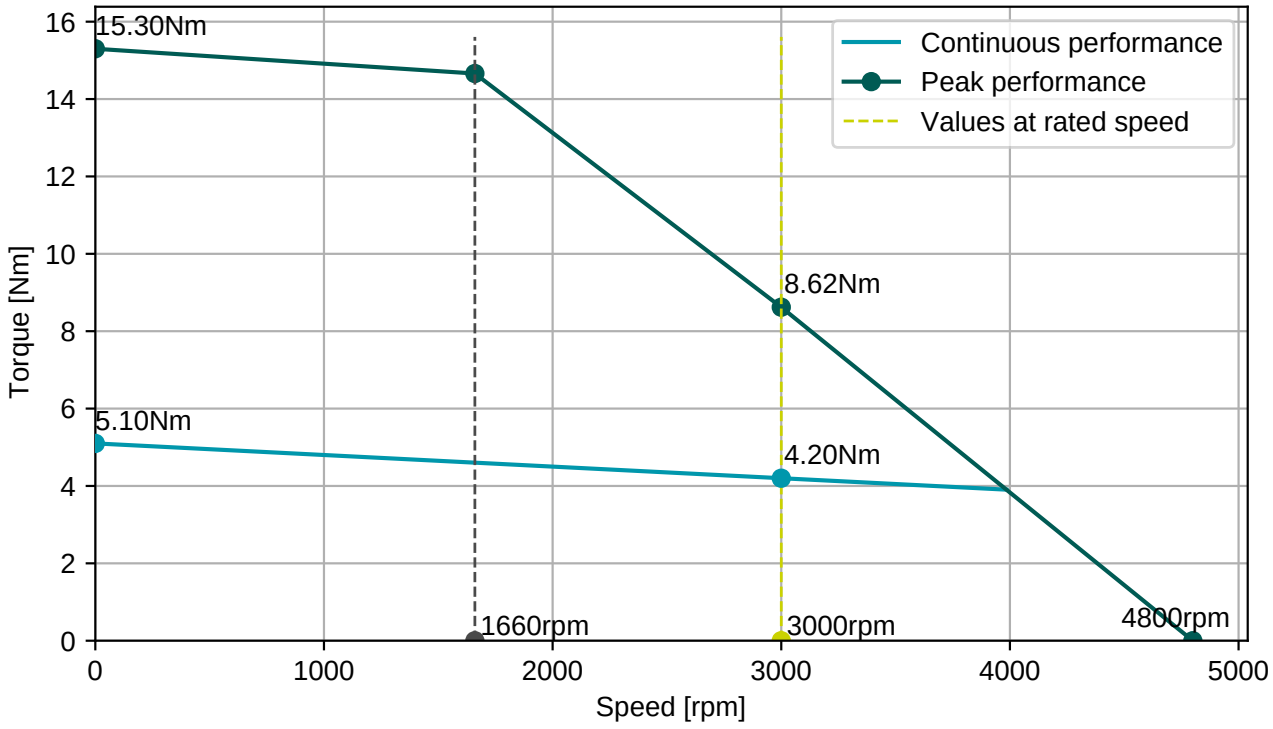

BGC110N00001216000
M23, 8 poles, rotary

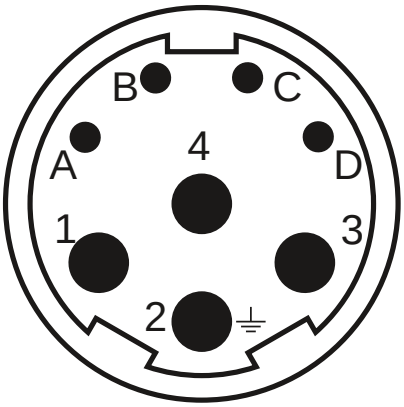

AGC113N00001215000
M23, 17 poles, rotary

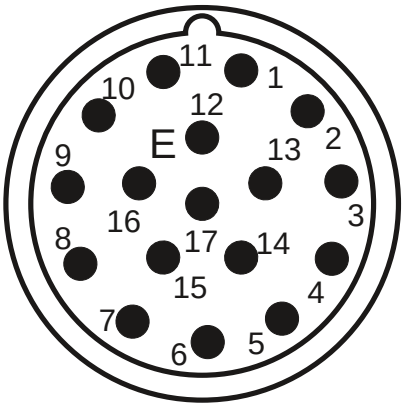

Connector 1 (9)	
1	U
4	V
3	W
2	PE
A	Brake+
B	Brake-
C	
D	

Connector 2 (130)	
1/9	SIN/REFSIN
3/11	COS/REFCOS
5/13	DATA/DATA-
4/2	Us/GND
14/7	Therm

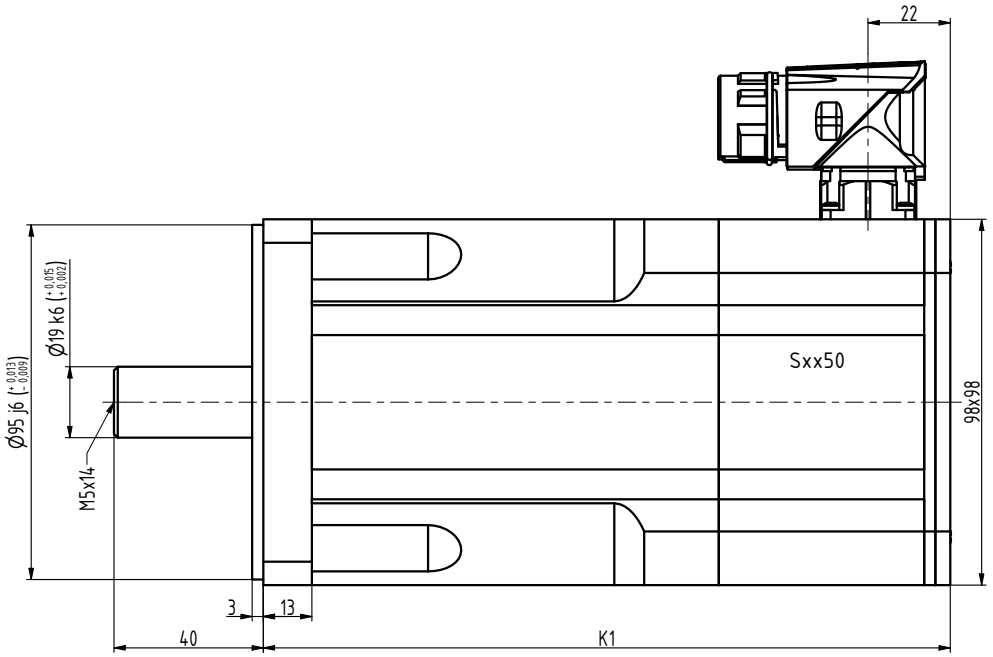

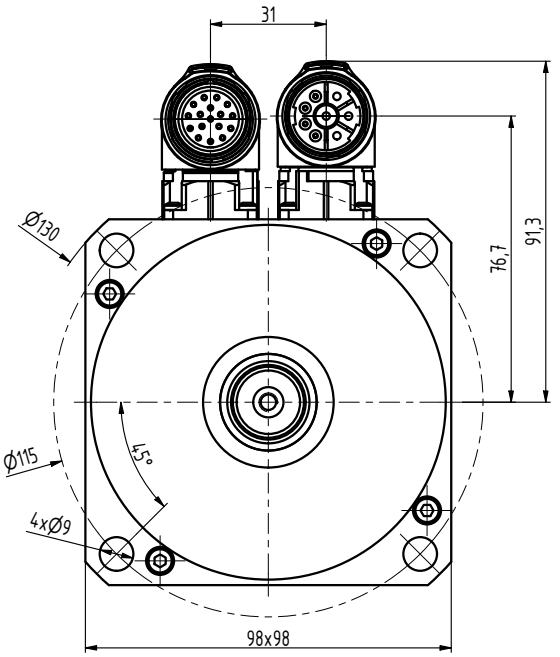

TYP	K1
N4-0340	169
N4-0510	184
N4-0750	214
N4-0960	244
N4-1130	274

INDEX	ZMĚNA	DATUM	PODPIS

ZN.MAT.		T.O.	HMOTNOST kg	MĚŘ.
ROZM.-POLOT.				
POM. ZAŘ.			ČSN	TŘ.Č.
VYPR. Ošlejšek	NORM.REF.		POZN.	Č. KUSOVNÍKU
PŘEKR.				
TECHNOL.	SCHVÁLIL Ošlejšek	12.07.2021	STARÝ V.	Č.V.

NÁZEV

Motor N4

N4095 00 B Z_S4_S1

Listů List