Engineering data (WIN 733)		
DC bus voltage	560	V DC
Nominal AC voltage	380	V AC (rms)
Rated voltage	297	V AC (rms)
Rated power	5.0	kW
Rated speed	3000	rpm
Rated torque	16.00	Nm
Rated current	11.5	A (rms)
Peak torque	60	Nm
Peak current	39.8	A (rms)
Stall torque	20	Nm
Stall current	11.6	A (rms)
No load speed	3650	rpm
EMF constant ±10%	104	V AC (rms) / 1000rpm
Theoretical torque constant ±10%	1.72	Nm / A (rms)
Torque constant ±10% @ rated load	1.39	Nm / A (rms)
Number of poles	10	
Electrical time constant	8.99	ms
Winding terminal resistance	0.701	Ω
Rotary field terminal inductance	6.3	mH

Customs info	
HS Code	85015220

Mechanical data (setting 16)		
Max mechanical speed	9000	rpm
Mech. time constant	0.62	ms
Thermal time constant	65	min
Rotor inertia	15.1	kgcm²
Protection	IP64	
Color	RAL 9005	
Cooling	Convection	
Motor-only mass	12.6	kg
Max. axial force 20kh	143	N
Max. radial force 20kh*	754	N
Max. axial force 100kh	84	N
Max. radial force 100kh*	441	N

** Defined for point of action at ½ output shaft length*

Sensors	
Temperature	PT1000 {PT1000}
Feedback	SRM50 (Hiperface) multi-turn, 1024 sin/cos+12bits

Brake		
Braking torque	18.00	Nm
Voltage	24	V DC
Power @20°C	24.0	W
Current @20°C	1.00	A
Inertia	2.00	kgcm²
Mass	1.80	kg

Torque / speed curve

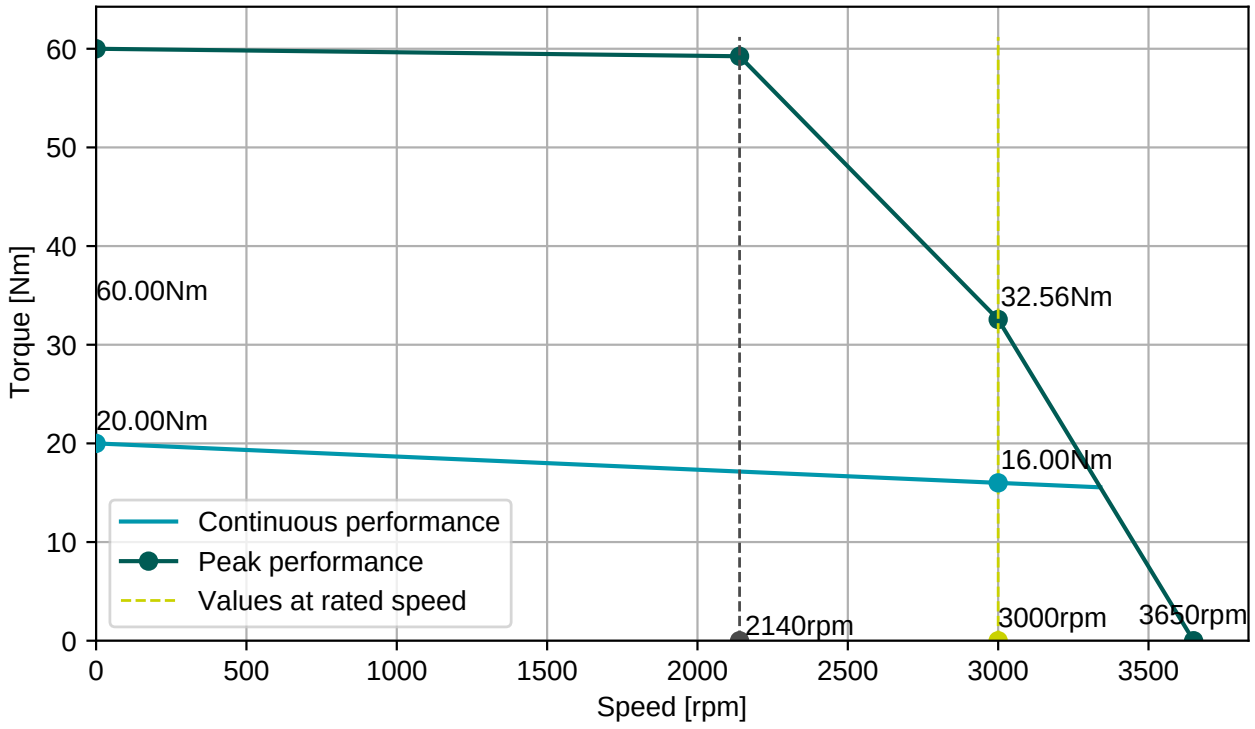

BGC110N00001216000
M23, 8 poles, rotary

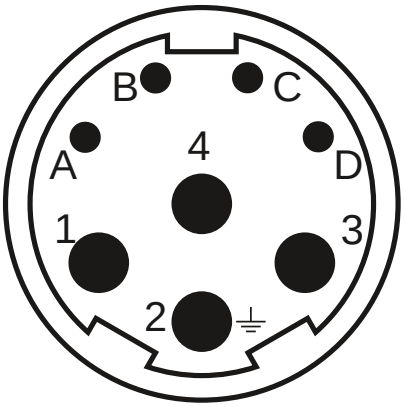

AGC113N00001215000
M23, 17 poles, rotary

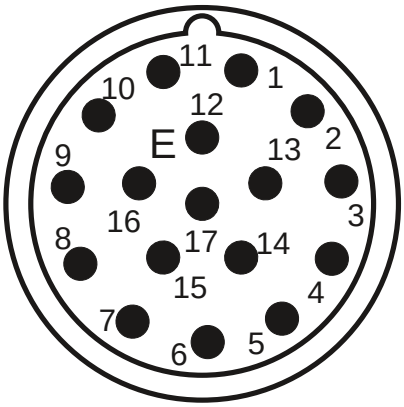

Connector 1 (9)	
1	U
4	V
3	W
2	PE
A	Brake+
B	Brake-
C	
D	

Connector 2 (130)	
1/9	SIN/REFSIN
3/11	COS/REFCOS
5/13	DATA/DATA-
4/2	Us/GND
14/7	Therm

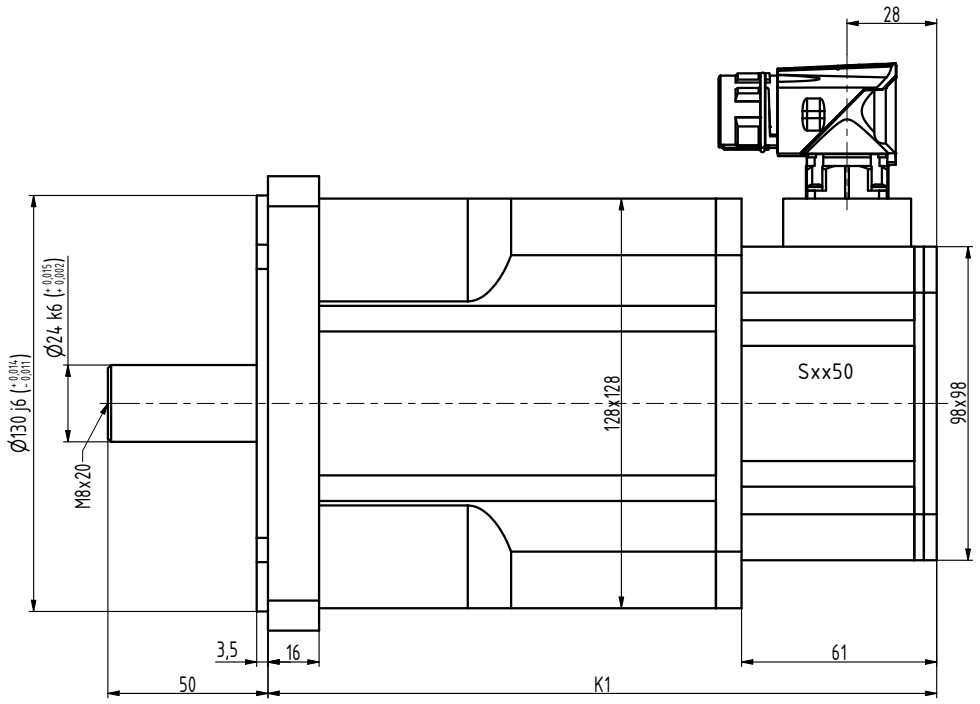

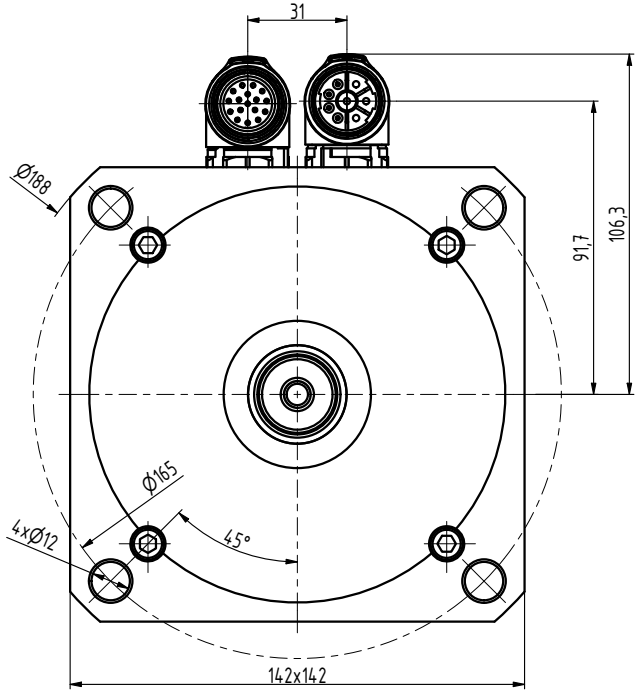

TYP	K1
N5-0650	179
N5-1200	209
N5-1600	239
N5-2000	269
N5-2400	299

INDEX	ZMĚNA	DATUM	PODPIS		
ZN.MAT.			T.O.	HMOTNOST kg	MĚŘ.
ROZM.-POLOT.					
POM. ZAŘ.				ČSN	TŘ.Č.
VYPR. Ošlejšek		NORM.REF.		POZN.	Č. KUSOVNÍKU
PŘEKR.					
TECHNOL.		SCHVÁLIL Ošlejšek	09.09.2021	STARÝ V.	Č.V.
NÁZEV	Motor N5			N5086 01 B Z_S4_S1	
				Listů	List