Engineering data (WIN 977)		
DC bus voltage	320	V DC
Nominal AC voltage	220	V AC (rms)
Rated voltage	185	V AC (rms)
Rated power	6.3	kW
Rated speed	3000	rpm
Rated torque	20.00	Nm
Rated current	22.97	A (rms)
Peak torque	72	Nm
Peak current	76.6	A (rms)
Stall torque	24	Nm
Stall current	22.3	A (rms)
No load speed	3380	rpm
EMF constant ±10%	65	V AC (rms) / 1000rpm
Theoretical torque constant ±10%	1.08	Nm / A (rms)
Torque constant ±10% @ rated load	0.87	Nm / A (rms)
Number of poles	10	
Electrical time constant	9.09	ms
Winding terminal resistance	0.22	Ω
Rotary field terminal inductance	2	mH

Customs info	
HS Code	85015220

Mechanical data (setting 16)		
Max mechanical speed	9000	rpm
Mech. time constant	0.62	ms
Thermal time constant	75	min
Rotor inertia	18.7	kgcm²
Protection	IP64	
Color	RAL 9005	
Cooling	Convection	
Motor-only mass	13.5	kg
Max. axial force 20kh	146	N
Max. radial force 20kh*	770	N
Max. axial force 100kh	86	N
Max. radial force 100kh*	450	N

** Defined for point of action at ½ output shaft length*

Sensors	
Temperature	PT1000 {PT1000}
Feedback	SRM50 (Hiperface) multi-turn, 1024 sin/cos+12bits

Torque / speed curve

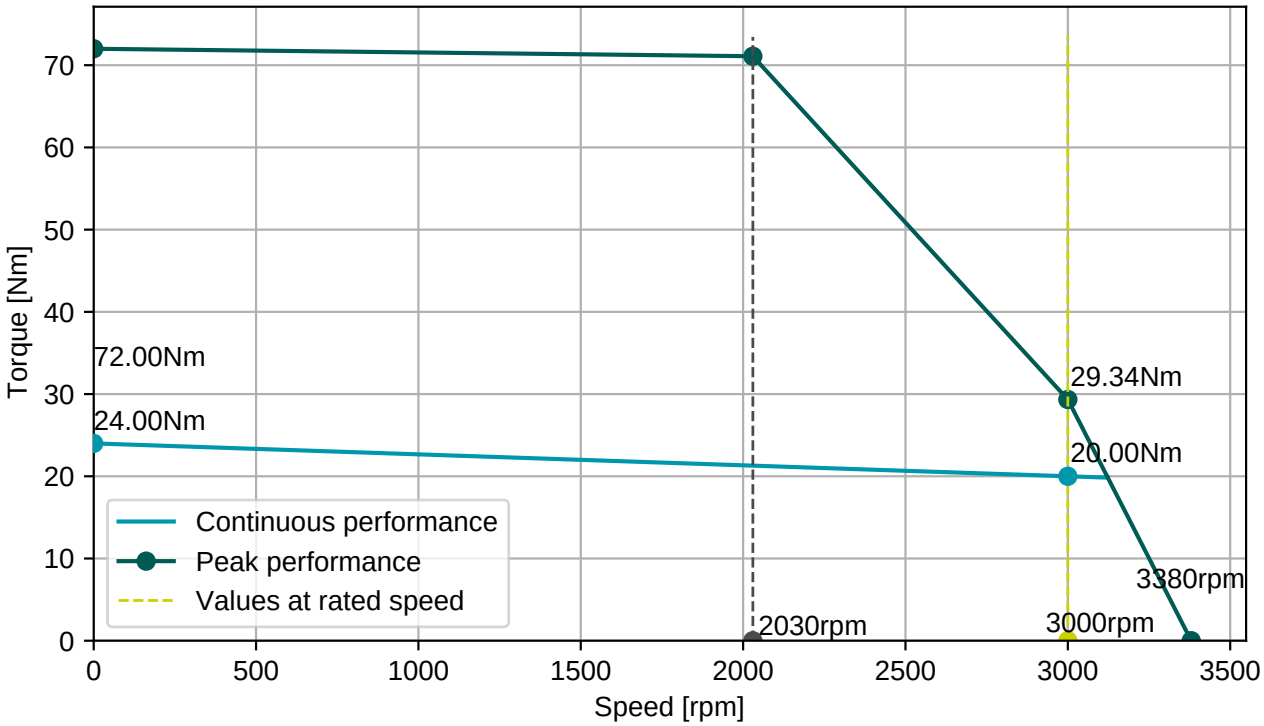

BGC110N00001216000
M23, 8 poles, rotary

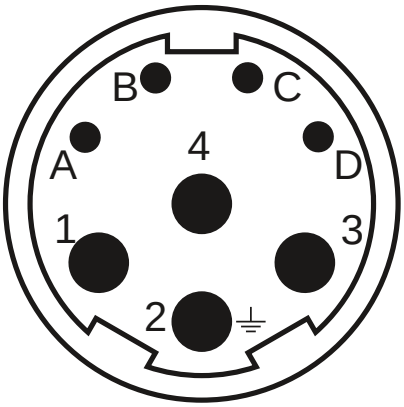

AGC113N00001215000
M23, 17 poles, rotary

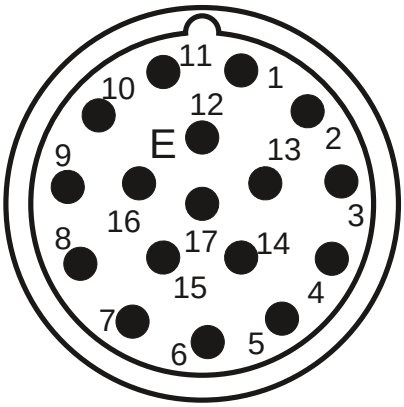

Connector 1 (9)	
1	U
4	V
3	W
2	PE
A	Brake+
B	Brake-
C	
D	

Connector 2 (130)	
1/9	SIN/REFSIN
3/11	COS/REFCOS
5/13	DATA/DATA-
4/2	Us/GND
14/7	Therm

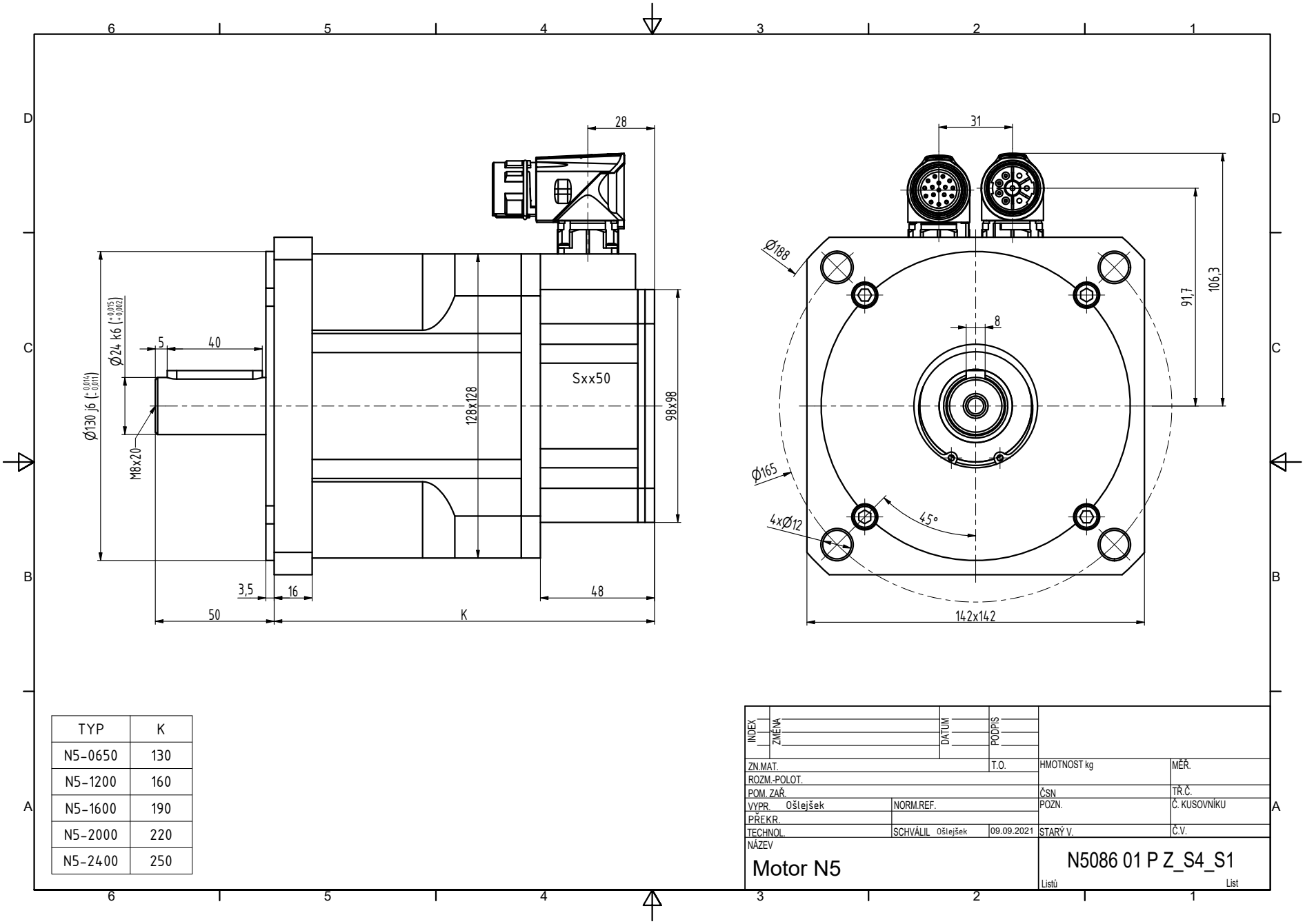

TYP	K
N5-0650	130
N5-1200	160
N5-1600	190
N5-2000	220
N5-2400	250

INDEX	ZMĚNA	DATUM	PODPIS		
ZN.MAT.		T.O.	HMOTNOST kg	MĚŘ.	
ROZM.-POLOT.					
POM. ZAŘ.			ČSN	TŘ.Č.	
VYPR. Ošlejšek	NORM.REF.		POZN.	Č. KUSOVNÍKU	
PŘEKR.					
TECHNOL.	SCHVÁLIL Ošlejšek	09.09.2021	STARÝ V.	Č.V.	
NÁZEV					
Motor N5			N5086 01 P Z_S4_S1		
			Listů	List	