Engineering data (WIN 2)		
DC bus voltage	24	V DC
Nominal AC voltage	16	V AC (rms)
Rated voltage	13	V AC (rms)
Rated power	19	W
Rated speed	3000	rpm
Rated torque	0.06	Nm
Rated current	2.4	A (rms)
Peak torque	0.12	Nm
Peak current	4.6	A (rms)
Stall torque	0.06	Nm
Stall current	2.27	A (rms)
No load speed	10000	rpm
EMF constant ±10%	1.6	V AC (rms) / 1000rpm
Theoretical torque constant ±10%	0.03	Nm / A (rms)
Torque constant ±10% @ rated load	0.02	Nm / A (rms)
Number of poles	6	
Electrical time constant	0.13	ms
Winding terminal resistance	2.6	Ω
Rotary field terminal inductance	0.33	mH

Customs info	
HS Code	85015100

Mechanical data (setting 5)		
Max mechanical speed	12000	rpm
Mech. time constant	2.44	ms
Thermal time constant	0	min
Rotor inertia	0.0038	kgcm²
Protection	IP64	
Color	RAL 9005	
Cooling	Convection	
Motor-only mass	0.2	kg

Sensors	
Feedback	2-pole resolver size 8

Torque / speed curve

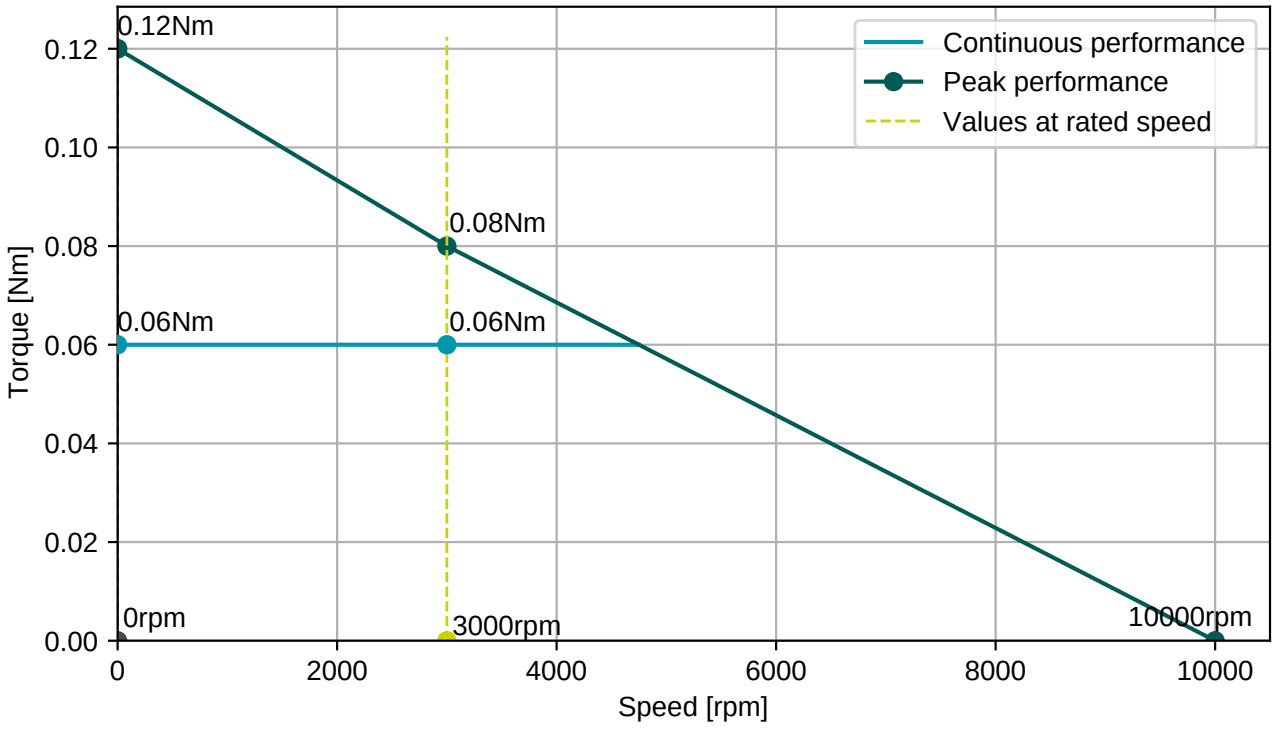

Connector 1 (31)	
white	U
blue	V
red	W
PE	PE
	2x Brake

Connector 2 (31)	
white	U
blue	V
red	W
PE	PE
	2x Brake

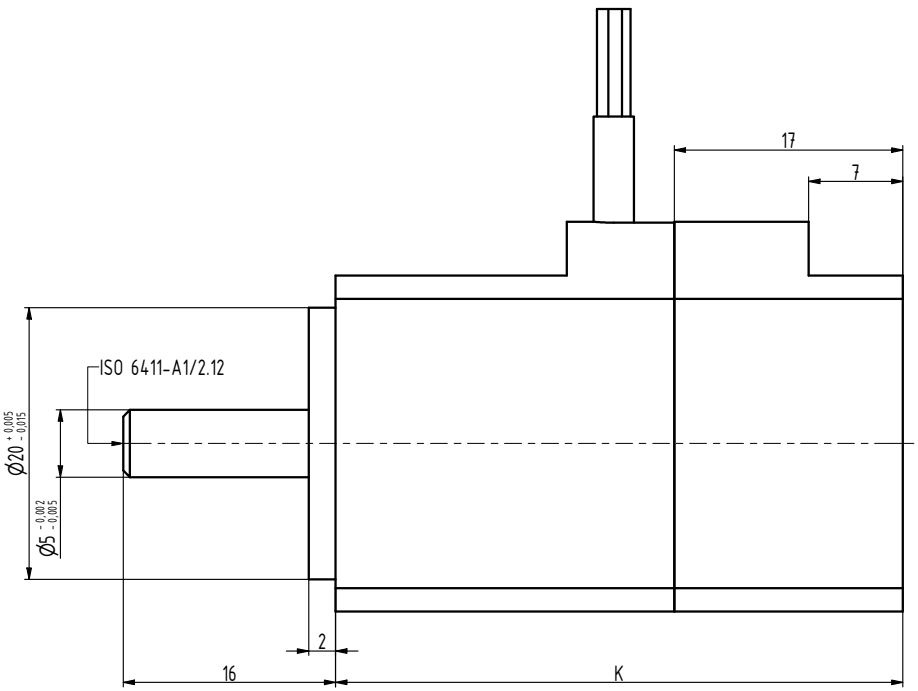

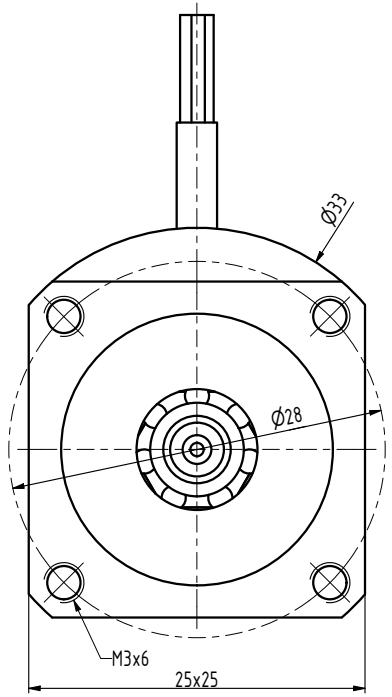

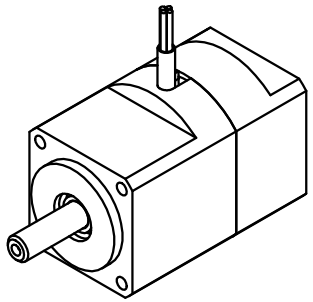

TYP	K
H0-0003	42
H0-0006	52
H0-0009	62

INDEX	ZMĚNA	DATUM	PODPIS		
ZN.MAT.			T.O.	HMOTNOST kg	MĚŘ.
ROZM.-POLOT.					
POM. ZAŘ.				ČSN	TŘ.Č.
VYPR. Ošlejšek		NORM.REF.		POZN.	Č. KUSOVNÍKU
PŘEZK.					
TECHNOL.		SCHVÁLIL Ošlejšek	17.07.2003	STARÝ V.	Č.V.

NÁZEV

MOTOR H0

H0001 00 Z

Listů List