Engineering data (WIN 1151)		
DC bus voltage	320	V DC
Nominal AC voltage	200	V AC (rms)
Rated voltage	100	V AC (rms)
Rated power	113	W
Rated speed	6000	rpm
Rated torque	0.18	Nm
Rated current	0.86	A (rms)
Peak torque	0.8	Nm
Peak current	3.9	A (rms)
Stall torque	0.2	Nm
Stall current	0.9	A (rms)
No load speed	14690	rpm
EMF constant ±10%	13.5	V AC (rms) / 1000rpm
Theoretical torque constant ±10%	0.22	Nm / A (rms)
Torque constant ±10% @ rated load	0.21	Nm / A (rms)
Number of poles	6	
Electrical time constant	0.36	ms
Winding terminal resistance	18.39	Ω
Rotary field terminal inductance	6.7	mH

Customs info	
HS Code	85015100

Mechanical data (setting 5)		
Max mechanical speed	12000	rpm
Mech. time constant	3.83	ms
Thermal time constant	20	min
Rotor inertia	0.06	kgcm²
Protection	IP64	
Color	RAL 9005	
Cooling	Convection	
Motor-only mass	0.58	kg

Sensors	
Temperature	PTC 111-K13 {PTC 111-K13 Reissmann}
Feedback	2-pole resolver size 10

Torque / speed curve

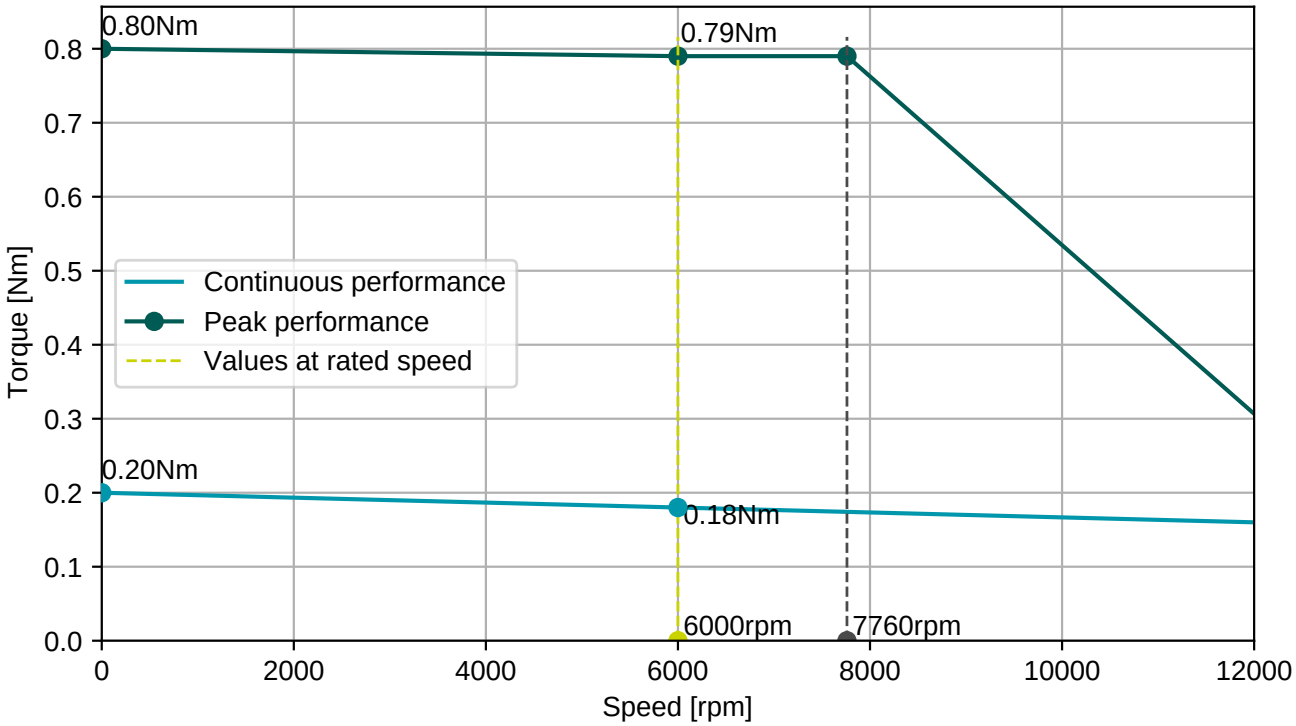

EGA101N00000001000

2x M15, 9 and 12 poles rotary

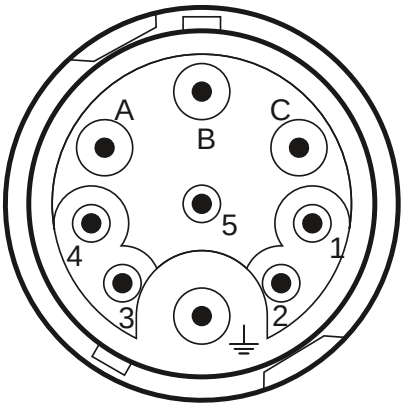

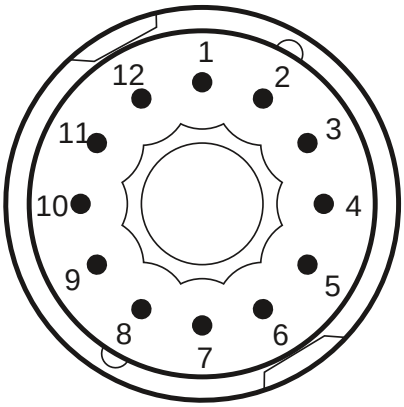

Connector 1 (226)	
A	U
B	V
C	W
PE	PE
1	Brake+
2	Brake-

Connector 2 (227)	
2	Therm+
3	S4
4	S3
5	R2
6	Therm-
7	S2
8	S1
9	R1

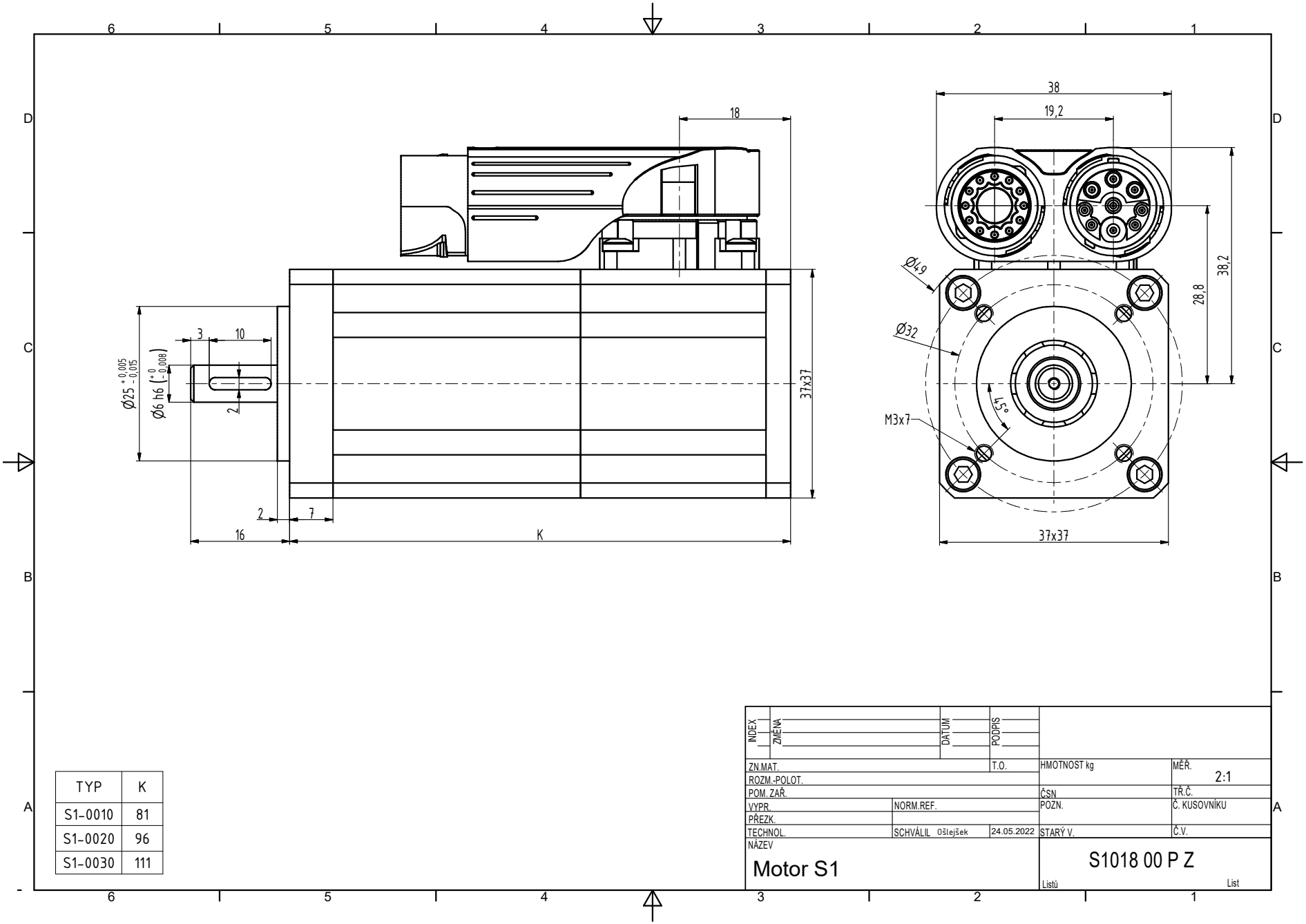

TYP	K
S1-0010	81
S1-0020	96
S1-0030	111

INDEX	ZMĚNA	DATUM	PODPIS		
ZN.MAT.		T.O.	HMOTNOST kg	MĚŘ. 2:1	
ROZM.-POLOT.					
POM. ZAŘ.			ČSN	TŘ.Č.	
VYPR.	NORM.REF.		POZN.	Č. KUSOVNÍKU	
PŘEZK.					
TECHNOL.	SCHVÁLIL Ošlejšek	24.05.2022	STARÝ V.	Č.V.	
NÁZEV: Motor S1			S1018 00 P Z		
			Listů	List	