| Engineering data (WIN 1152) | | |
|---|---|---|
| DC bus voltage | 320 | V DC |
| Nominal AC voltage | 200 | V AC (rms) |
| Rated voltage | 94 | V AC (rms) |
| Rated power | 57 | W |
| Rated speed | 6000 | rpm |
| Rated torque | 0.09 | Nm |
| Rated current | 0.52 | A (rms) |
| Peak torque | 0.4 | Nm |
| Peak current | 2.3 | A (rms) |
| Stall torque | 0.1 | Nm |
| Stall current | 0.53 | A (rms) |
| No load speed | 17100 | rpm |
| EMF constant ±10% | 11.5 | V AC (rms) / 1000rpm |
| Theoretical torque constant ±10% | 0.19 | Nm / A (rms) |
| Torque constant ±10% @ rated load | 0.17 | Nm / A (rms) |
| Number of poles | 6 | |
| Electrical time constant | 0.25 | ms |
| Winding terminal resistance | 38.89 | Ω |
| Rotary field terminal inductance | 9.8 | mH |

| Customs info | |
|---|---|
| HS Code | 85015100 |

| Mechanical data (setting 5) | | |
|---|---|---|
| Max mechanical speed | 12000 | rpm |
| Mech. time constant | 4.47 | ms |
| Thermal time constant | 18 | min |
| Rotor inertia | 0.024 | kgcm² |
| Protection | IP64 | |
| Color | RAL 9005 | |
| Cooling | Convection | |
| Motor-only mass | 0.5 | kg |

| Sensors | |
|---|---|
| Temperature | PT1000 {PT1000} |
| Feedback | 2-pole resolver size 10 |

| Brake | | |
|---|---|---|
| Braking torque | 0.40 | Nm |
| Voltage | 24 | V DC |
| Power @20°C | 8.0 | W |
| Current @20°C | 0.33 | A |
| Inertia | 0.02 | kgcm² |
| Mass | 0.10 | kg |

Torque / speed curve

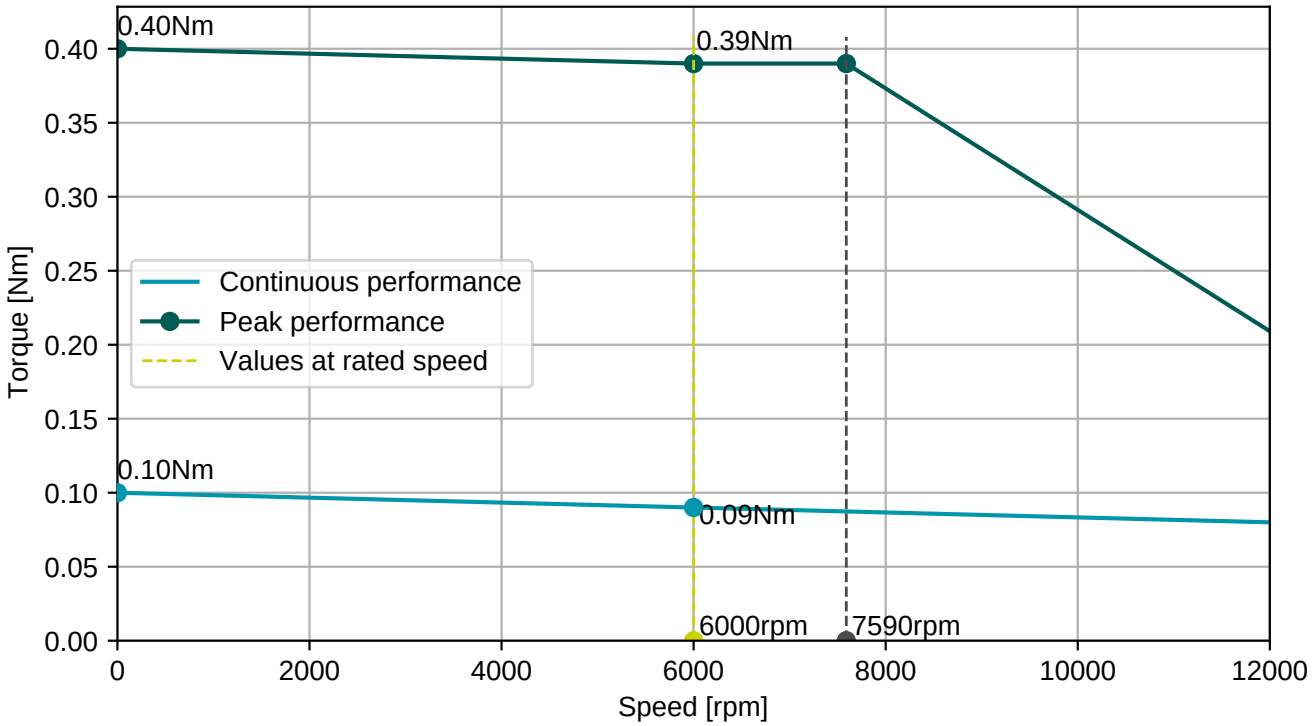


**EGA101N00000001000**

2x M15, 9 and 12 poles rotary

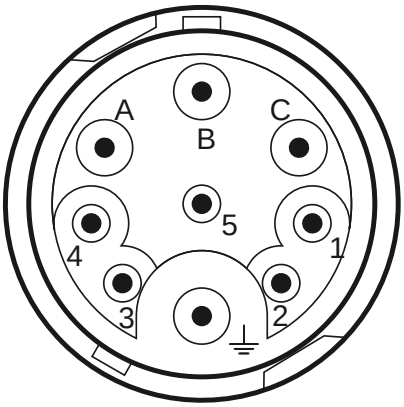


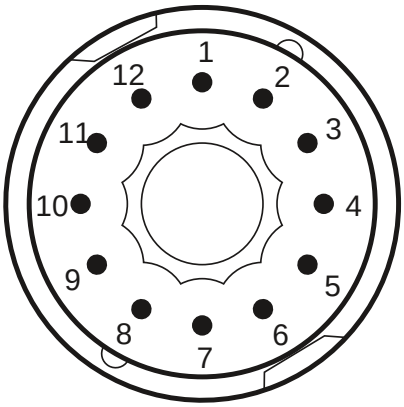


| Connector 1 (226) | |
|---|---|
| **A** | U |
| **B** | V |
| **C** | W |
| **PE** | PE |
| **1** | Brake+ |
| **2** | Brake- |

| Connector 2 (227) | |
|---|---|
| **2** | Therm+ |
| **3** | S4 |
| **4** | S3 |
| **5** | R2 |
| **6** | Therm- |
| **7** | S2 |
| **8** | S1 |
| **9** | R1 |

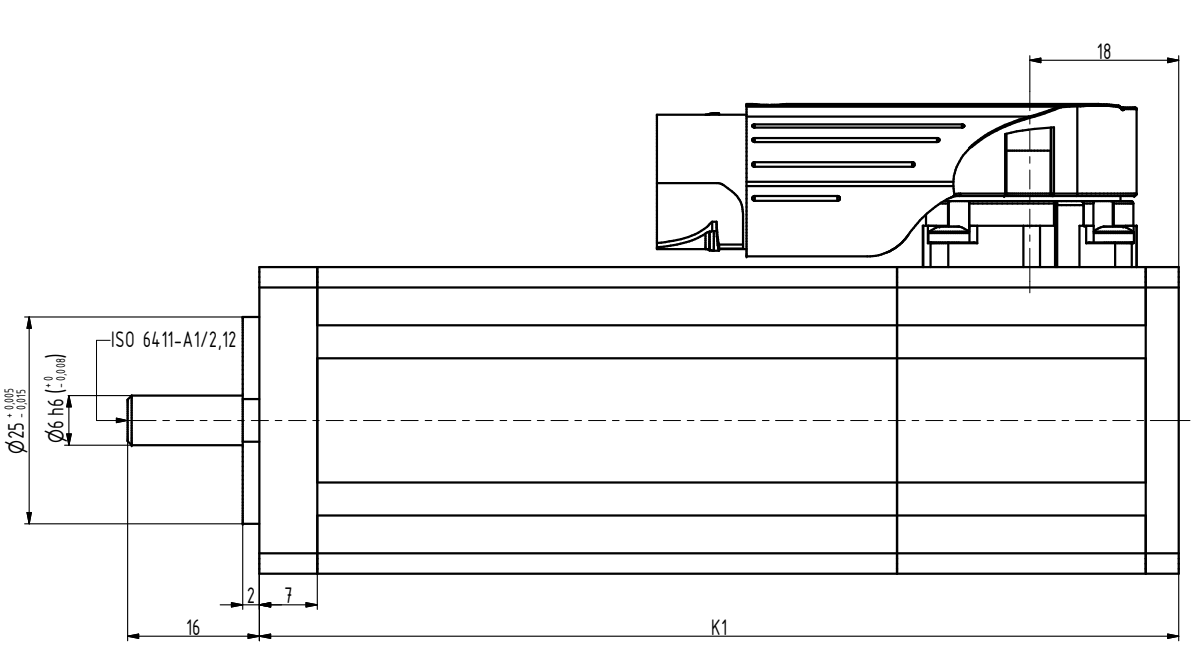


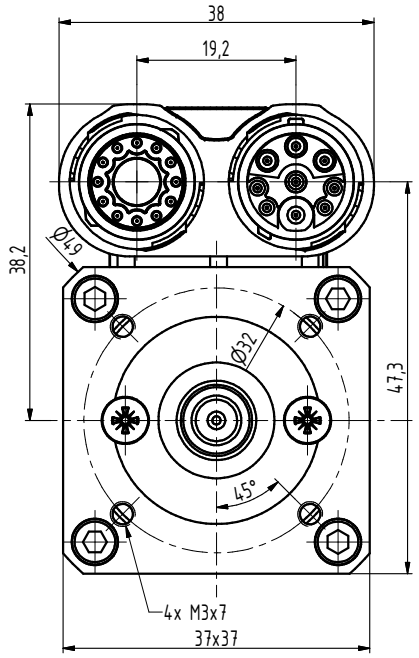


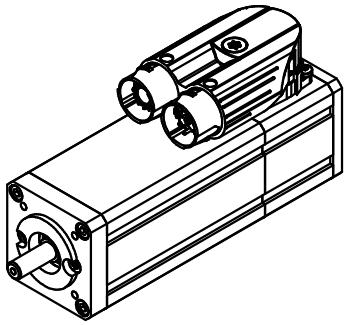

| TYP | A | K1 |
|---|---|---|
| S1-0010 | 15 | 111 |
| S1-0020 | 30 | 126 |
| S1-0030 | 45 | 141 |

| | | | | | |
|---|---|---|---|---|---|
| INDEX | ZMĚNA | | DATUM | PODPIS | |
| ZN.MAT. | | | T.O. | HMOTNOST kg | MĚŘ. |
| ROZM.-POLOT. | | | | | |
| POM. ZAŘ. | | | | ČSN | TŘ.Č. |
| VYPR. Ošlejšek | | NORM.REF. | | POZN. | Č. KUSOVNÍKU |
| PŘEKR. | | | | | |
| TECHNOL. | | SCHVÁLIL Ošlejšek | 22.4.2016 | STARÝ V. | Č.V. |
| NÁZEV | Motor S1 | | | S1018 00 B Z | |
| | | | | Listů | List |