| Engineering data (WIN 811) | | |
|---|---|---|
| DC bus voltage | 560 | V DC |
| Nominal AC voltage | 380 | V AC (rms) |
| Rated voltage | 301 | V AC (rms) |
| Rated power | 320 | W |
| Rated speed | 4500 | rpm |
| Rated torque | 0.68 | Nm |
| Rated current | 0.83 | A (rms) |
| Peak torque | 3 | Nm |
| Peak current | 3.9 | A (rms) |
| Stall torque | 0.75 | Nm |
| Stall current | 0.86 | A (rms) |
| No load speed | 7100 | rpm |
| EMF constant ±10% | 53 | V AC (rms) / 1000rpm |
| Theoretical torque constant ±10% | 0.88 | Nm / A (rms) |
| Torque constant ±10% @ rated load | 0.82 | Nm / A (rms) |
| Number of poles | 6 | |
| Electrical time constant | 1.34 | ms |
| Winding terminal resistance | 53.86 | Ω |
| Rotary field terminal inductance | 72.1 | mH |

| Customs info | |
|---|---|
| HS Code | 85015100 |

| Mechanical data (setting 5) | | |
|---|---|---|
| Max mechanical speed | 12000 | rpm |
| Mech. time constant | 1.09 | ms |
| Thermal time constant | 12 | min |
| Rotor inertia | 0.09 | kgcm² |
| Protection | IP64 | |
| Color | RAL 9005 | |
| Cooling | Convection | |
| Motor-only mass | 1.1 | kg |
| Max. axial force 20kh | 41 | N |
| Max. radial force 20kh* | 215 | N |
| Max. axial force 100kh | 24 | N |
| Max. radial force 100kh* | 126 | N |

** Defined for point of action at ½ output shaft length*

| Sensors | |
|---|---|
| Temperature | PT1000 {PT1000} |
| Feedback | 2-pole resolver ( ER5Kd411, TS2620N21E11, RE-15-1-A15) |

Torque / speed curve

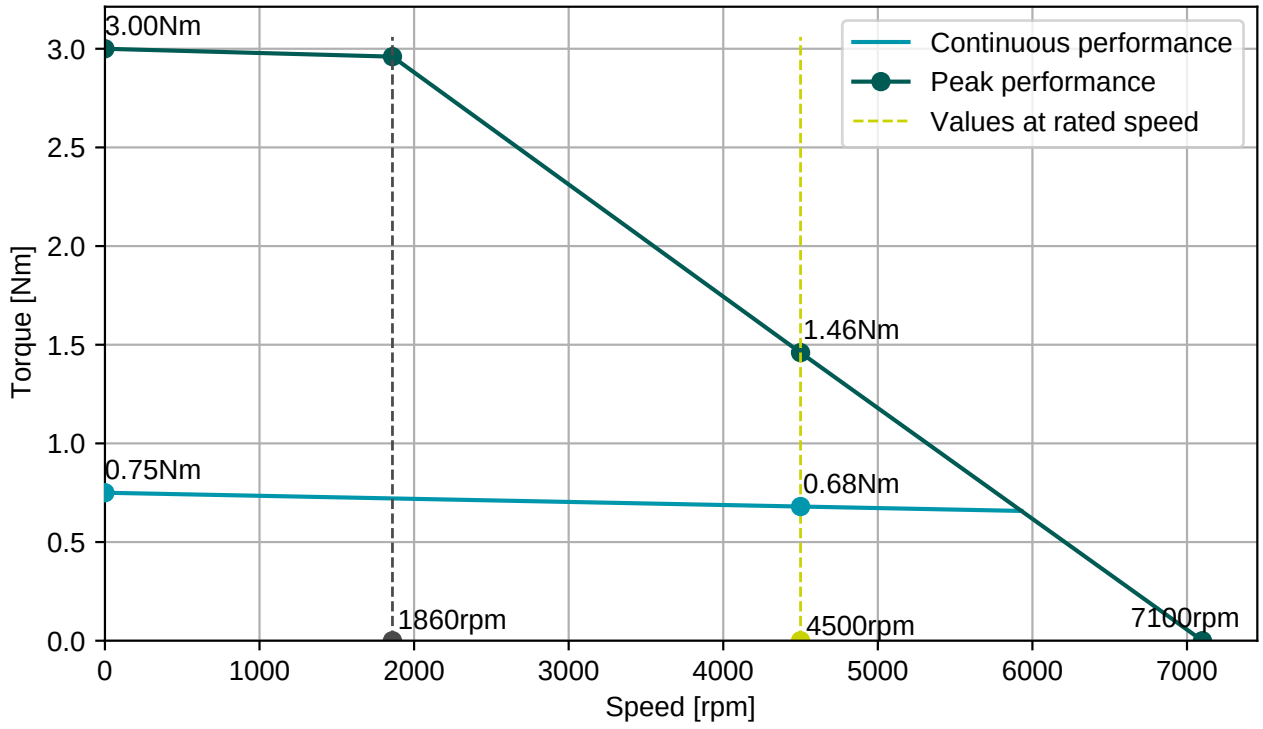


**EGA101N00000001000**

2x M15, 9 and 12 poles rotary

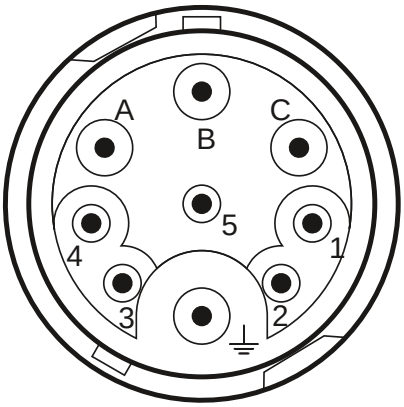


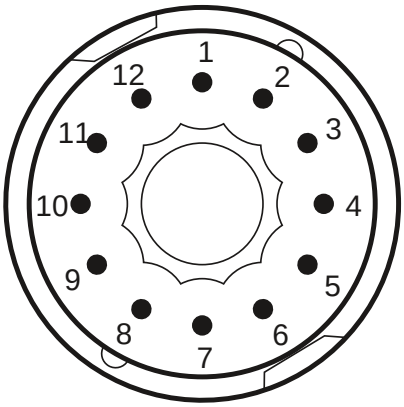


| Connector 1 (226) | |
|---|---|
| **A** | U |
| **B** | V |
| **C** | W |
| **PE** | PE |
| **1** | Brake+ |
| **2** | Brake- |

| Connector 2 (227) | |
|---|---|
| **2** | Therm+ |
| **3** | S4 |
| **4** | S3 |
| **5** | R2 |
| **6** | Therm- |
| **7** | S2 |
| **8** | S1 |
| **9** | R1 |

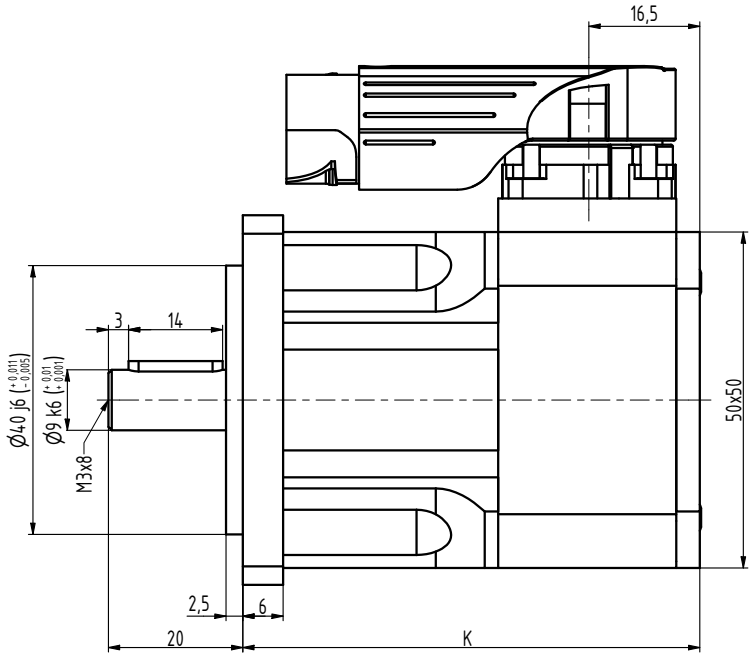


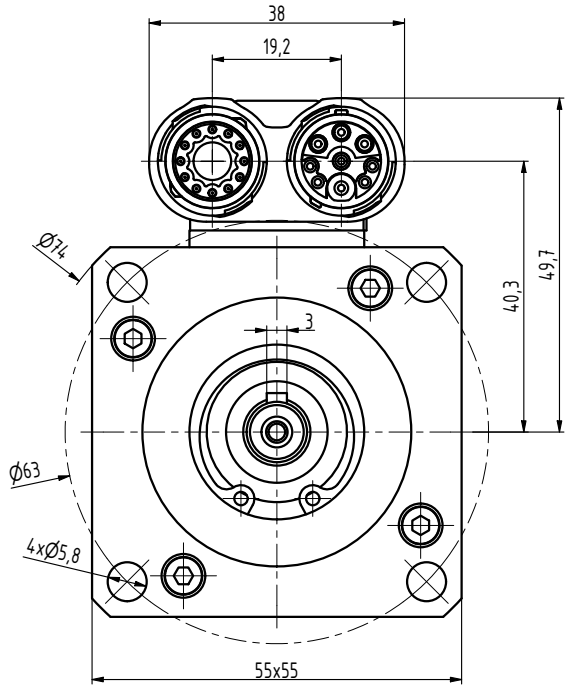


| TYP | K |
|---|---|
| N2-0028 | 68 |
| N2-0054 | 83 |
| N2-0075 | 98 |
| N2-0095 | 113 |
| N2-0112 | 128 |

| INDEX | ZMĚNA | DATUM | PODPIS | | |
|---|---|---|---|---|---|
| ZN.MAT. | | | T.O. | HMOTNOST kg | MĚŘ. |
| ROZM.-POLOT. | | | | | |
| POM. ZAŘ. | | | | ČSN | TŘ.Č. |
| VYPR. Ošlejšek | | NORM.REF. | | POZN. | Č. KUSOVNÍKU |
| PŘEKR. Ošlejšek 22.05.21 | | | | | |
| TECHNOL. | | SCHVÁLIL Ošlejšek | 19.11.2012 | STARÝ V. | Č.V. |

NÁZEV

Motor N2

N2057 01 P Z_Y_S1

Listů List