Engineering data (WIN 1621)		
DC bus voltage	320	V DC
Nominal AC voltage	220	V AC (rms)
Rated voltage	167	V AC (rms)
Rated power	539	W
Rated speed	5000	rpm
Rated torque	1.03	Nm
Rated current	2.24	A (rms)
Peak torque	6.65	Nm
Peak current	14	A (rms)
Stall torque	1.75	Nm
Stall current	3.16	A (rms)
No load speed	6540	rpm
EMF constant ±10%	33.5	V AC (rms) / 1000rpm
Theoretical torque constant ±10%	0.554	Nm / A (rms)
Torque constant ±10% @ rated load	0.460	Nm / A (rms)
Number of poles	10	
Electrical time constant	1.43	ms
Winding terminal resistance	3.607	Ω
Rotary field terminal inductance	5.17	mH

Customs info	
HS Code	85015100

Mechanical data (setting 5)		
Max mechanical speed	12000	rpm
Mech. time constant	1.38	ms
Thermal time constant	28	min
Rotor inertia	0.68	kgcm²
Protection	IP64	
Color	RAL 9005	
Cooling	Convection	
Motor-only mass	1.9	kg
Max. axial force 20kh	45	N
Max. radial force 20kh*	239	N
Max. axial force 100kh	27	N
Max. radial force 100kh*	140	N

** Defined for point of action at ½ output shaft length*

Sensors	
Temperature	PT1000 {PT1000}
Feedback	2-pole resolver (ER5Kd411, TS2620N21E11, RE-15-1-A15)

Torque / speed curve

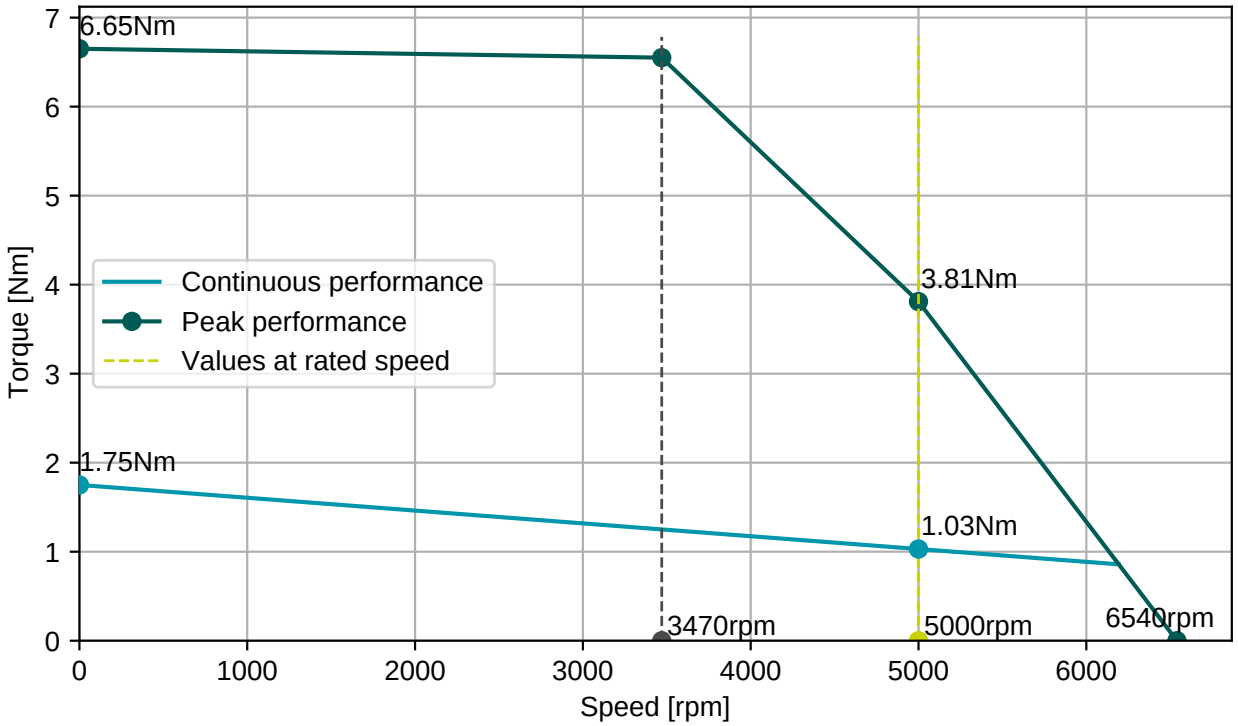

BGC110N00001216000
M23, 8 poles, rotary

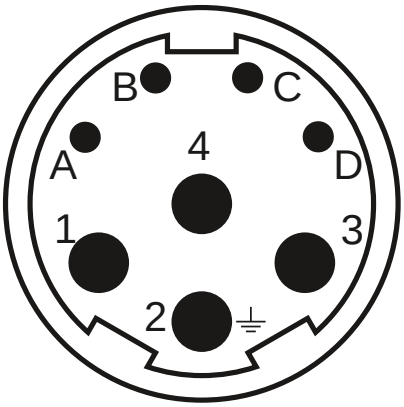

AGC052N00001215000
M23, 12 poles, rotary

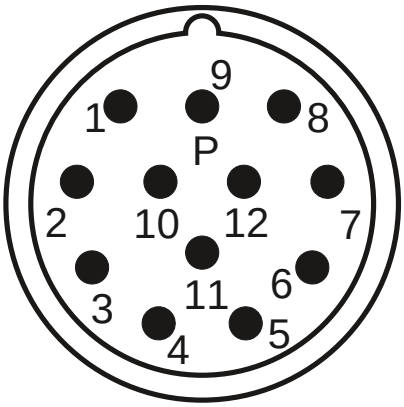

Connector 1 (9)	
1	U
4	V
3	W
2	PE
A	Brake+
B	Brake-
C	
D	

Connector 2 (10)	
2	Therm+
3	S4
4	S3
5	R2
6	Therm-
7	S2
8	S1
9	R1

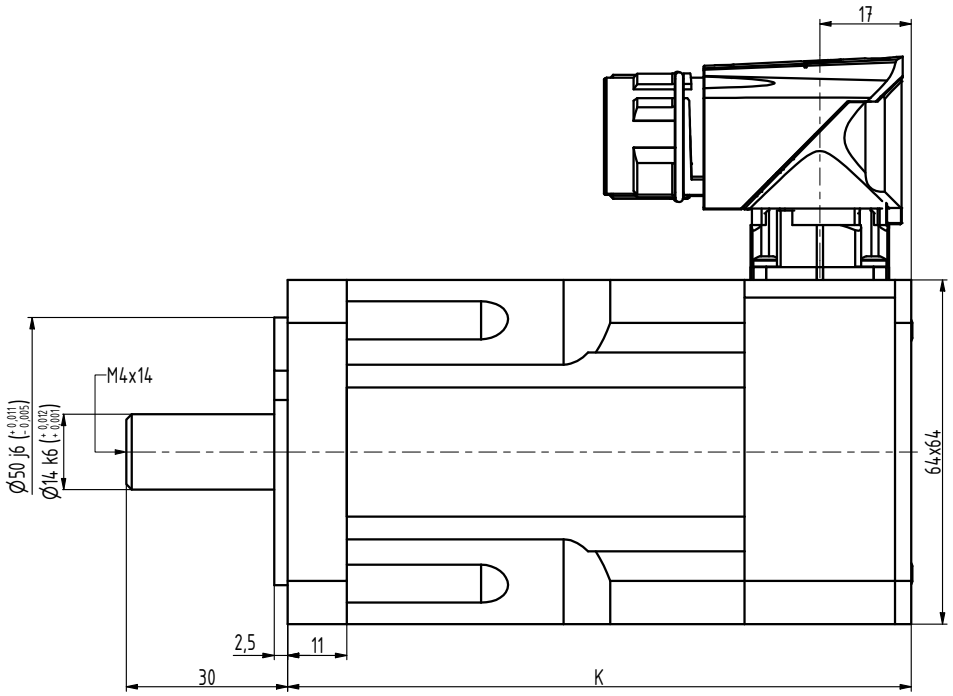

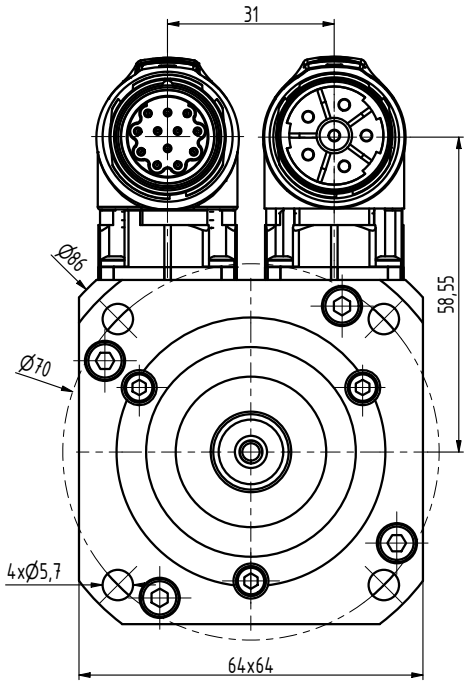

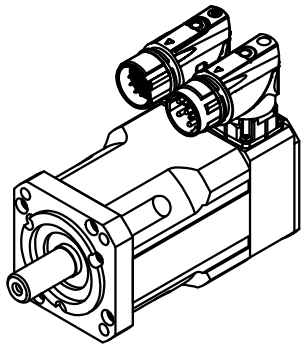

TYP	K
MA-0075	98
MA-0130	116
MA-0175	134
MA-0220	152
MA-0300	188

INDEX	ZMĚNA	DATUM	PODPIS

ZN.MAT.		T.O.	HMOTNOST kg	MĚŘ.
ROZM.-POLOT.				
POM. ZAŘ.			ČSN	TŘ.Č.
VYPR. Šimík	NORM.REF.		POZN.	Č. KUSOVNÍKU
PŘEKR. Šimík 28.2.2019				
TECHNOL.	SCHVÁLIL Weis	13.11.2017	STARÝ V.	Č.V.

NÁZEV

Motor MA

MA000 00 Z_S4_S1

Listů List