Engineering data (WIN 1270)		
DC bus voltage	560	V DC
Nominal AC voltage	380	V AC (rms)
Rated voltage	276	V AC (rms)
Rated power	490	W
Rated speed	6000	rpm
Rated torque	0.78	Nm
Rated current	1.27	A (rms)
Peak torque	4.94	Nm
Peak current	8.33	A (rms)
Stall torque	1.3	Nm
Stall current	1.77	A (rms)
No load speed	8140	rpm
EMF constant ±10%	44.5	V AC (rms) / 1000rpm
Theoretical torque constant ±10%	0.734	Nm / A (rms)
Torque constant ±10% @ rated load	0.614	Nm / A (rms)
Number of poles	10	
Electrical time constant	1.44	ms
Winding terminal resistance	9.598	Ω
Rotary field terminal inductance	13.8	mH

Customs info	
HS Code	85015100

Mechanical data (setting 5)		
Max mechanical speed	12000	rpm
Mech. time constant	1.53	ms
Thermal time constant	24	min
Rotor inertia	0.5	kgcm²
Protection	IP64	
Color	RAL 9005	
Cooling	Convection	
Motor-only mass	1.6	kg
Max. axial force 20kh	43	N
Max. radial force 20kh*	225	N
Max. axial force 100kh	25	N
Max. radial force 100kh*	131	N

** Defined for point of action at ½ output shaft length*

Sensors	
Temperature	PT1000 {PT1000}
Feedback	2-pole resolver (ER5Kd411, TS2620N21E11, RE-15-1-A15)

Torque / speed curve

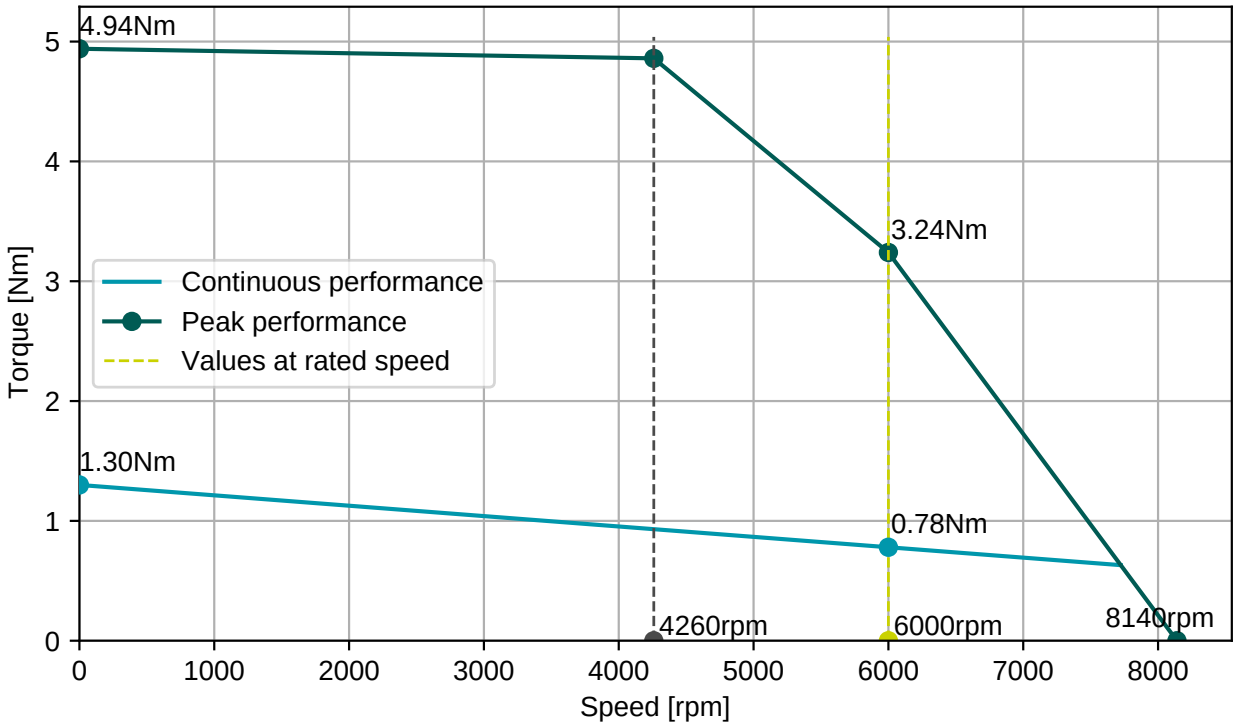

BGC110N00001216000
M23, 8 poles, rotary

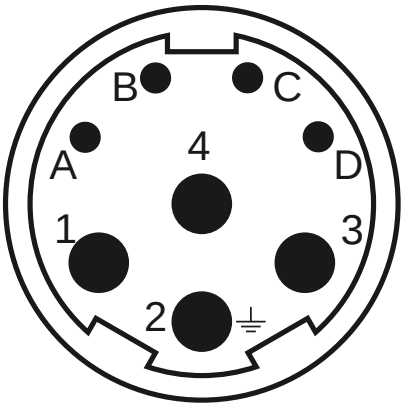

AGC052N00001215000
M23, 12 poles, rotary

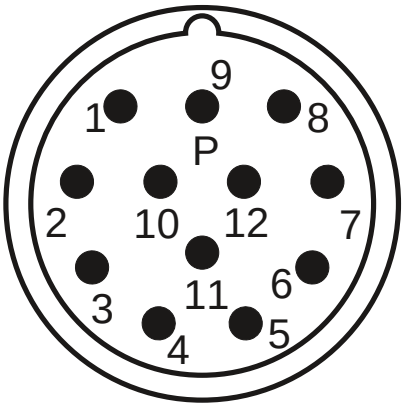

Connector 1 (9)	
1	U
4	V
3	W
2	PE
A	Brake+
B	Brake-
C	
D	

Connector 2 (10)	
2	Therm+
3	S4
4	S3
5	R2
6	Therm-
7	S2
8	S1
9	R1

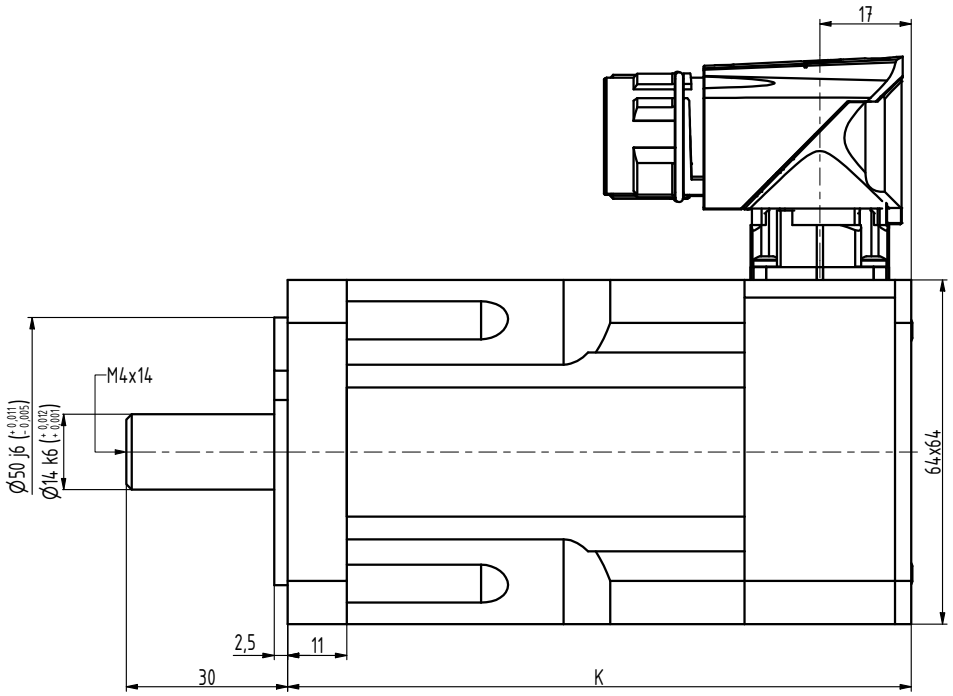

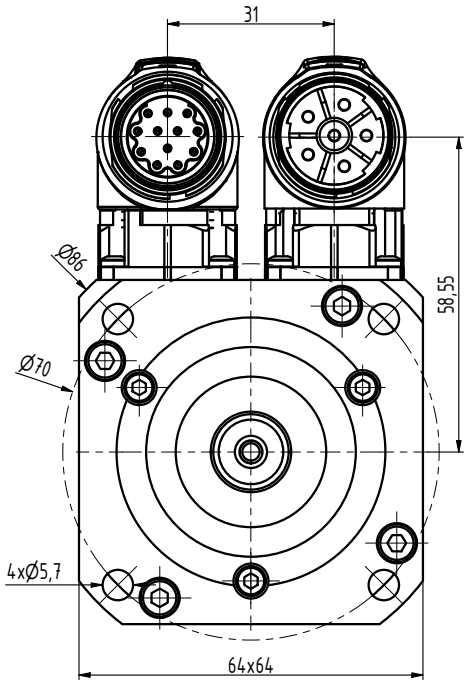

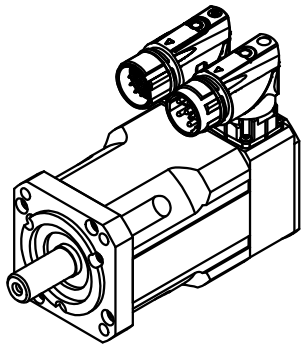

TYP	K
MA-0075	98
MA-0130	116
MA-0175	134
MA-0220	152
MA-0300	188

INDEX	ZMĚNA	DATUM	PODPIS

ZN.MAT.		T.O.	HMOTNOST kg	MĚŘ.
ROZM.-POLOT.				
POM. ZAŘ.			ČSN	TŘ.Č.
VYPR. Šimík	NORM.REF.		POZN.	Č. KUSOVNÍKU
PŘEKR. Šimík 28.2.2019				
TECHNOL.	SCHVÁLIL Weis	13.11.2017	STARÝ V.	Č.V.

NÁZEV

Motor MA

MA000 00 Z_S4_S1

Listů List