Engineering data (WIN 1074)		
DC bus voltage	560	V DC
Nominal AC voltage	380	V AC (rms)
Rated voltage	274	V AC (rms)
Rated power	4.1	kW
Rated speed	3000	rpm
Rated torque	13.00	Nm
Rated current	10.96	A (rms)
Peak torque	51	Nm
Peak current	45.4	A (rms)
Stall torque	18	Nm
Stall current	12.2	A (rms)
No load speed	4260	rpm
EMF constant ±10%	89	V AC (rms) / 1000rpm
Theoretical torque constant ±10%	1.47	Nm / A (rms)
Torque constant ±10% @ rated load	1.19	Nm / A (rms)
Number of poles	10	
Electrical time constant	11.61	ms
Winding terminal resistance	0.62	Ω
Rotary field terminal inductance	7.2	mH

Customs info	
HS Code	85015220

Mechanical data (setting 5)		
Max mechanical speed	6000	rpm
Mech. time constant	0.92	ms
Thermal time constant	42	min
Rotor inertia	18.5	kgcm²
Protection	IP64	
Color	RAL 9005	
Cooling	Convection	
Motor-only mass	13.7	kg
Max. axial force 20kh	133	N
Max. radial force 20kh*	699	N
Max. axial force 100kh	78	N
Max. radial force 100kh*	409	N

** Defined for point of action at ½ output shaft length*

Sensors	
Temperature	PT1000 {PT1000}
Feedback	2-pole resolver (ER5Kd411, TS2620N21E11, RE-15-1-A15)

Brake		
Braking torque	36.00	Nm
Voltage	24	V DC
Power @20°C	26.0	W
Current @20°C	1.08	A
Inertia	6.20	kgcm²
Mass	2.85	kg

Torque / speed curve

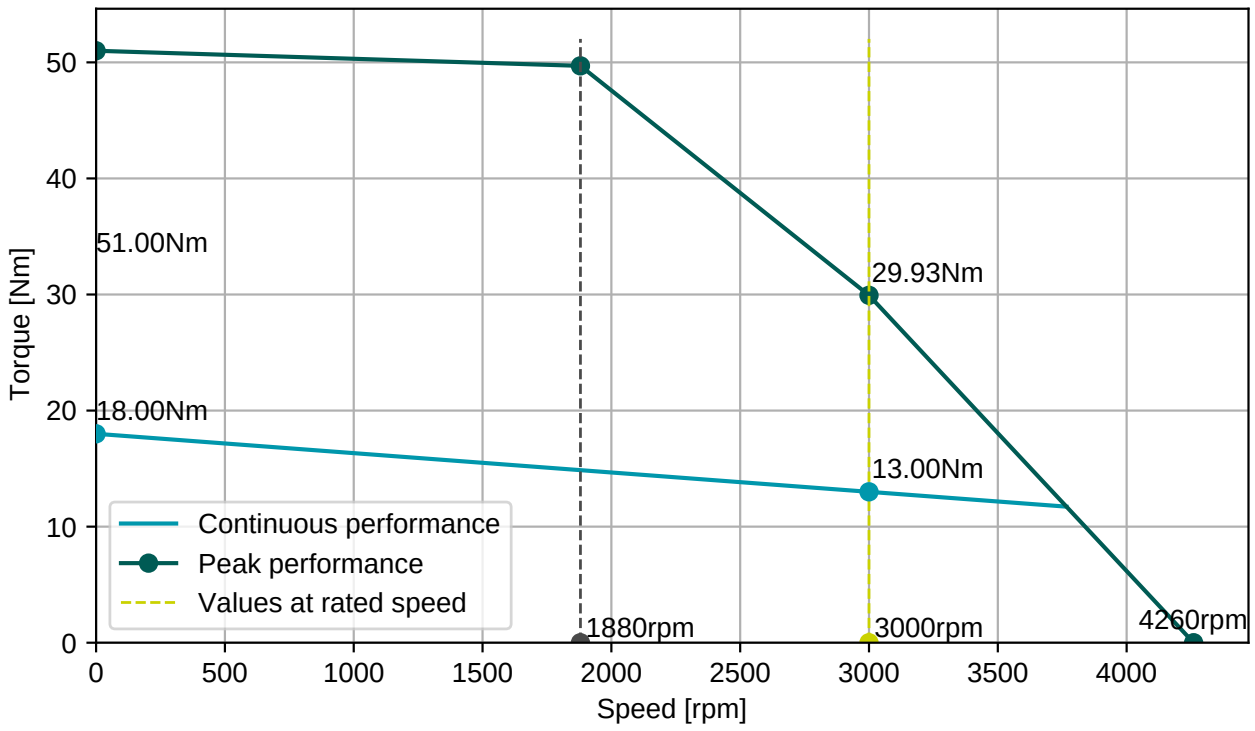

BGC110N00001216000
M23, 8 poles, rotary

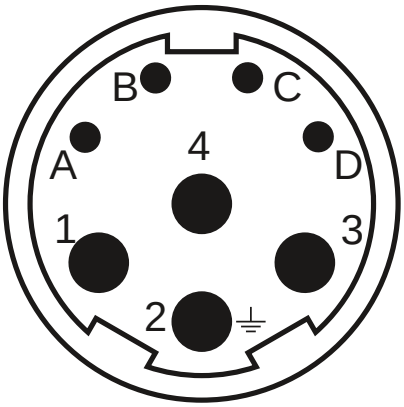

AGC052N00001215000
M23, 12 poles, rotary

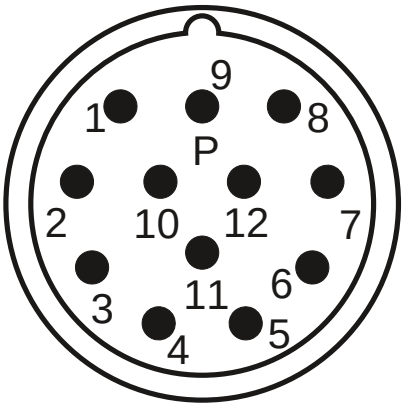

Connector 1 (9)	
1	U
4	V
3	W
2	PE
A	Brake+
B	Brake-
C	
D	

Connector 2 (10)	
2	Therm+
3	S4
4	S3
5	R2
6	Therm-
7	S2
8	S1
9	R1

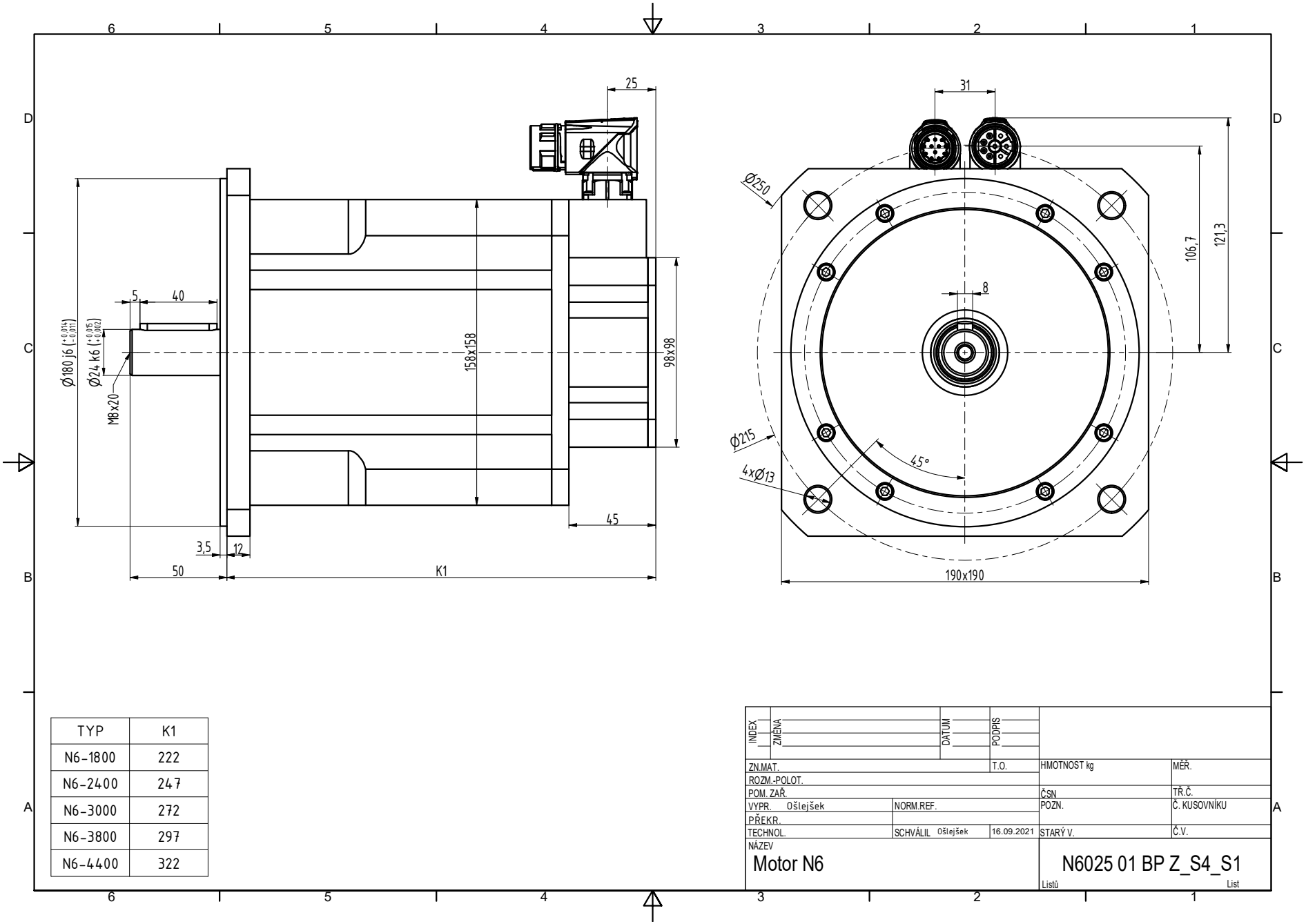

TYP	K1
N6-1800	222
N6-2400	247
N6-3000	272
N6-3800	297
N6-4400	322

INDEX	ZMĚNA	DATUM	PODPIS

ZN.MAT.		T.O.	HMOTNOST kg	MĚŘ.
ROZM.-POLOT.				
POM. ZAŘ.			ČSN	TŘ.Č.
VYPR. Ošlejšek	NORM.REF.		POZN.	Č. KUSOVNÍKU
PŘEKR.				
TECHNOL.	SCHVÁLIL Ošlejšek	16.09.2021	STARÝ V.	Č.V.

NÁZEV
Motor N6

N6025 01 BP Z_S4_S1

Listů List