| Engineering data (WIN 932) | | |
|---|---|---|
| DC bus voltage | 560 | V DC |
| Nominal AC voltage | 380 | V AC (rms) |
| Rated voltage | 269 | V AC (rms) |
| Rated power | 5.3 | kW |
| Rated speed | 3000 | rpm |
| Rated torque | 17.00 | Nm |
| Rated current | 13.81 | A (rms) |
| Peak torque | 72 | Nm |
| Peak current | 59.6 | A (rms) |
| Stall torque | 24 | Nm |
| Stall current | 15.3 | A (rms) |
| No load speed | 4000 | rpm |
| EMF constant ±10% | 95 | V AC (rms) / 1000rpm |
| Theoretical torque constant ±10% | 1.57 | Nm / A (rms) |
| Torque constant ±10% @ rated load | 1.23 | Nm / A (rms) |
| Number of poles | 10 | |
| Electrical time constant | 13.41 | ms |
| Winding terminal resistance | 0.41 | Ω |
| Rotary field terminal inductance | 5.5 | mH |

| Customs info | |
|---|---|
| HS Code | 85015220 |

| Mechanical data (setting 5) | | |
|---|---|---|
| Max mechanical speed | 6000 | rpm |
| Mech. time constant | 0.74 | ms |
| Thermal time constant | 47 | min |
| Rotor inertia | 25.6 | kgcm² |
| Protection | IP64 | |
| Color | RAL 9005 | |
| Cooling | Convection | |
| Motor-only mass | 13.8 | kg |
| Max. axial force 20kh | 130 | N |
| Max. radial force 20kh* | 684 | N |
| Max. axial force 100kh | 76 | N |
| Max. radial force 100kh* | 400 | N |

** Defined for point of action at ½ output shaft length*

| Sensors | |
|---|---|
| Temperature | PT1000 {PT1000} |
| Feedback | 2-pole resolver ( ER5Kd411, TS2620N21E11, RE-15-1-A15) |

Torque / speed curve

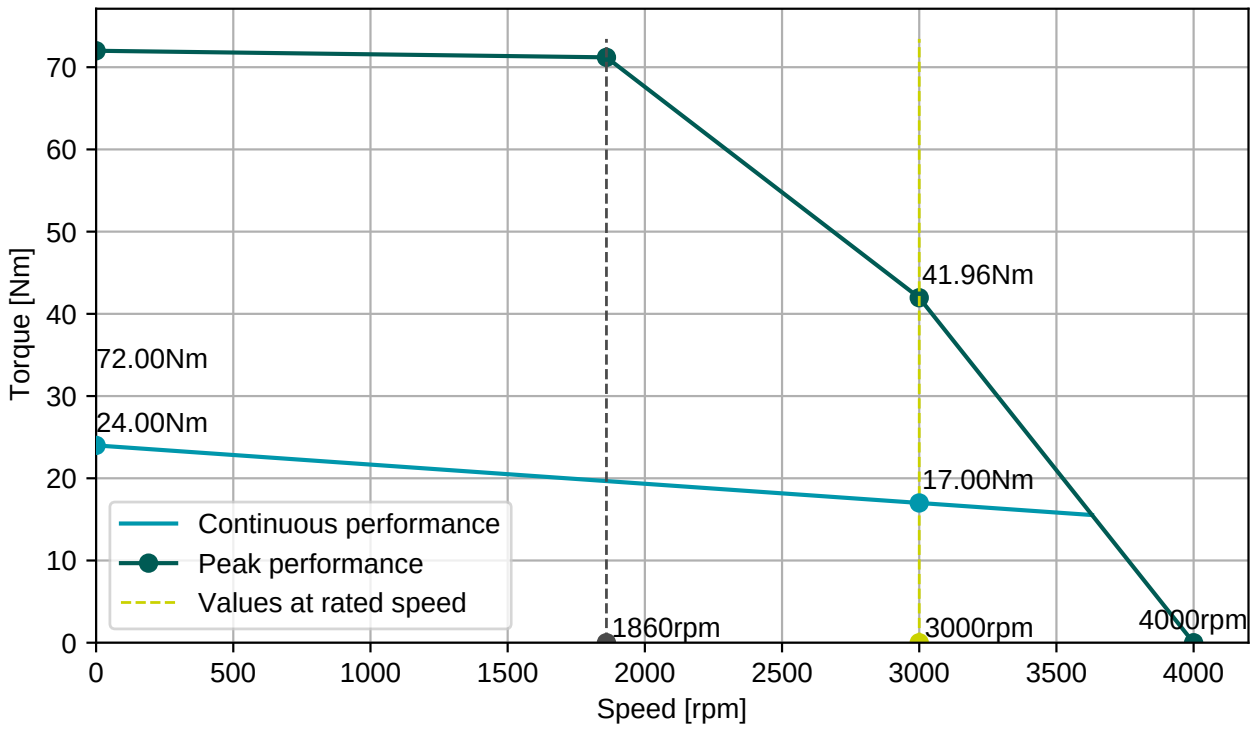


**BGC110N00001216000**
M23, 8 poles, rotary

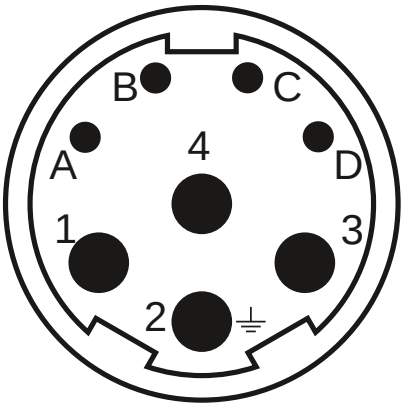


**AGC052N00001215000**
M23, 12 poles, rotary

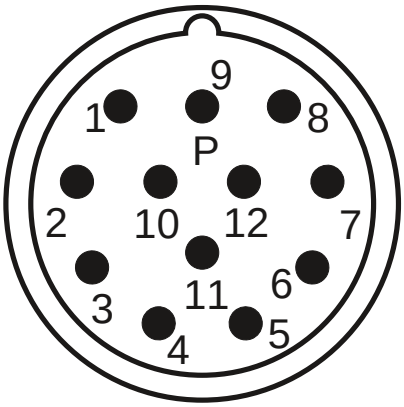


| Connector 1 (9) | |
|---|---|
| **1** | U |
| **4** | V |
| **3** | W |
| **2** | PE |
| **A** | Brake+ |
| **B** | Brake- |
| **C** | |
| **D** | |

| Connector 2 (10) | |
|---|---|
| **2** | Therm+ |
| **3** | S4 |
| **4** | S3 |
| **5** | R2 |
| **6** | Therm- |
| **7** | S2 |
| **8** | S1 |
| **9** | R1 |

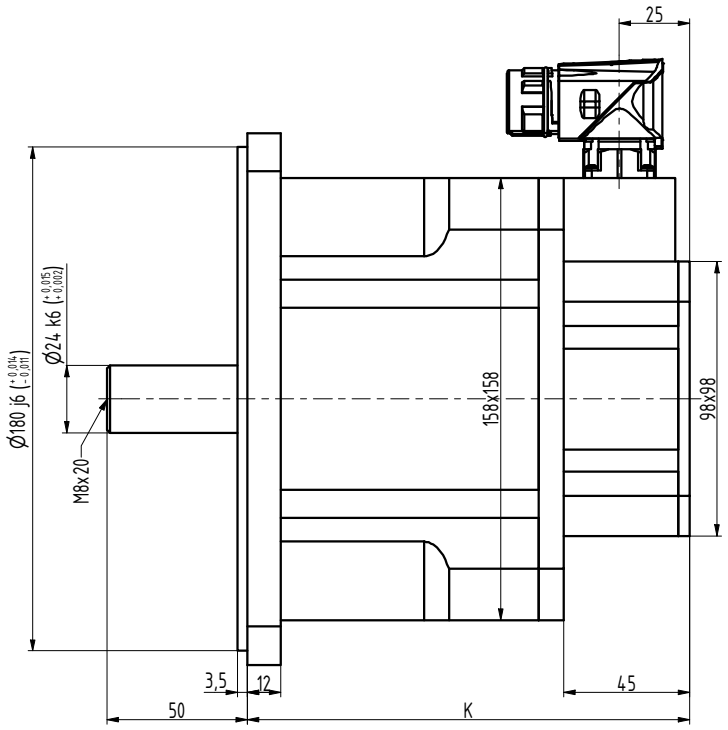


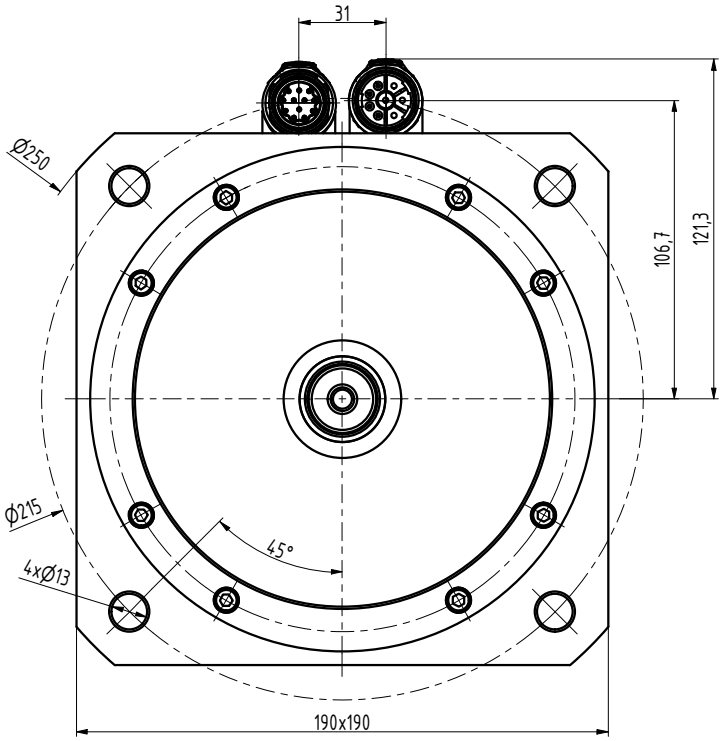


| TYP | K |
|---|---|
| N6-1800 | 158 |
| N6-2400 | 183 |
| N6-3000 | 208 |
| N6-3800 | 233 |
| N6-4400 | 258 |

| INDEX | ZMĚNA | DATUM | PODPIS | | |
|---|---|---|---|---|---|
| ZN.MAT. | | | T.O. | HMOTNOST kg | MĚŘ. |
| ROZM.-POLOT. | | | | | |
| POM. ZAŘ. | | | | ČSN | TŘ.Č. |
| VYPR. Ošlejšek | | NORM.REF. | | POZN. | Č. KUSOVNÍKU |
| PŘEKR. | | | | | |
| TECHNOL. | | SCHVÁLIL Ošlejšek | 16.09.2021 | STARÝ V. | Č.V. |
| NÁZEV | Motor N6 | | | N6025 01 Z_S4_S1 | |
| | | | | Listů | List |