Engineering data (WIN 976)		
DC bus voltage	560	V DC
Nominal AC voltage	380	V AC (rms)
Rated voltage	269	V AC (rms)
Rated power	3.1	kW
Rated speed	2000	rpm
Rated torque	14.80	Nm
Rated current	8.56	A (rms)
Peak torque	51	Nm
Peak current	32.9	A (rms)
Stall torque	18	Nm
Stall current	8.8	A (rms)
No load speed	3080	rpm
EMF constant ±10%	123	V AC (rms) / 1000rpm
Theoretical torque constant ±10%	2.03	Nm / A (rms)
Torque constant ±10% @ rated load	1.73	Nm / A (rms)
Number of poles	10	
Electrical time constant	11.51	ms
Winding terminal resistance	1.19	Ω
Rotary field terminal inductance	13.7	mH

Customs info	
HS Code	85015220

Mechanical data (setting 5)		
Max mechanical speed	6000	rpm
Mech. time constant	0.92	ms
Thermal time constant	42	min
Rotor inertia	18.5	kgcm²
Protection	IP64	
Color	RAL 9005	
Cooling	Convection	
Motor-only mass	9.2	kg
Max. axial force 20kh	139	N
Max. radial force 20kh*	729	N
Max. axial force 100kh	81	N
Max. radial force 100kh*	427	N

** Defined for point of action at ½ output shaft length*

Sensors	
Temperature	PT1000 {PT1000}
Feedback	2-pole resolver (ER5Kd411, TS2620N21E11, RE-15-1-A15)

Torque / speed curve

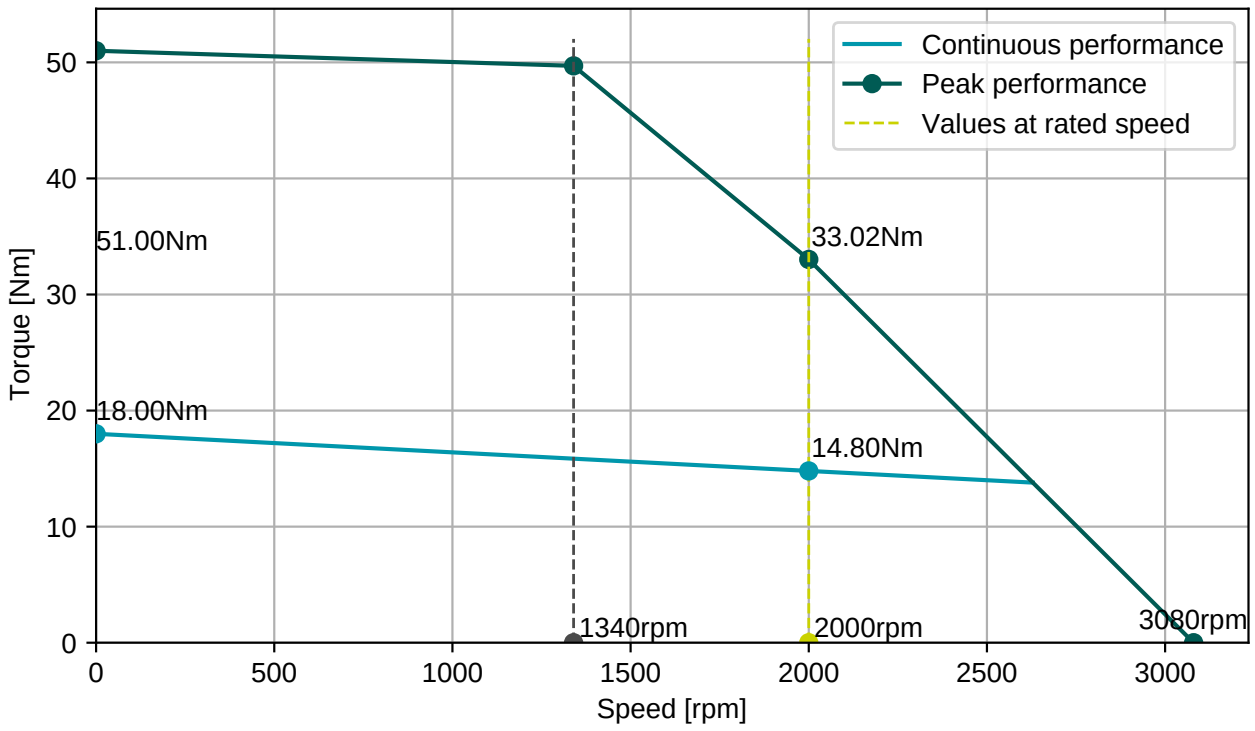

BGC110N00001216000
M23, 8 poles, rotary

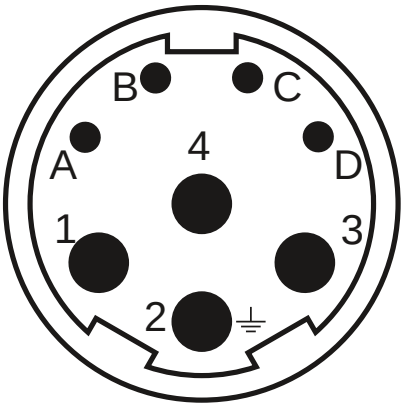

AGC052N00001215000
M23, 12 poles, rotary

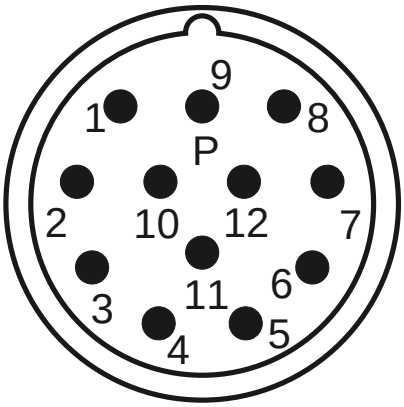

Connector 1 (9)	
1	U
4	V
3	W
2	PE
A	Brake+
B	Brake-
C	
D	

Connector 2 (10)	
2	Therm+
3	S4
4	S3
5	R2
6	Therm-
7	S2
8	S1
9	R1

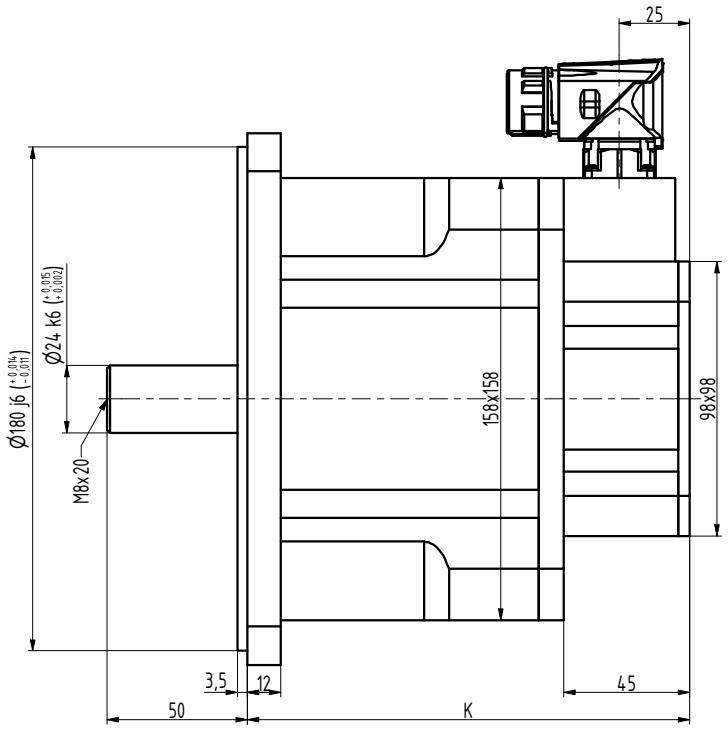

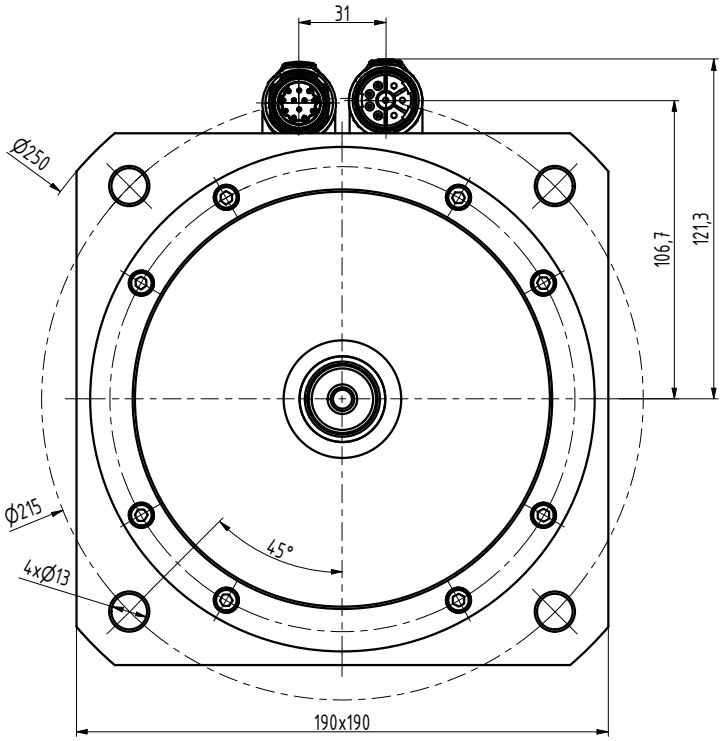

TYP	K
N6-1800	158
N6-2400	183
N6-3000	208
N6-3800	233
N6-4400	258

INDEX	ZMĚNA	DATUM	PODPIS		
ZN.MAT.			T.O.	HMOTNOST kg	MĚŘ.
ROZM.-POLOT.					
POM. ZAŘ.				ČSN	TŘ.Č.
VYPR. Ošlejšek		NORM.REF.		POZN.	Č. KUSOVNÍKU
PŘEKR.					
TECHNOL.		SCHVÁLIL Ošlejšek	16.09.2021	STARÝ V.	Č.V.
NÁZEV	Motor N6			N6025 01 Z_S4_S1	
				Listů	List