Engineering data (WIN 731)		
DC bus voltage	560	V DC
Nominal AC voltage	380	V AC (rms)
Rated voltage	296	V AC (rms)
Rated power	4.3	kW
Rated speed	3000	rpm
Rated torque	13.80	Nm
Rated current	9.89	A (rms)
Peak torque	48	Nm
Peak current	35.6	A (rms)
Stall torque	16	Nm
Stall current	10.1	A (rms)
No load speed	3950	rpm
EMF constant ±10%	96	V AC (rms) / 1000rpm
Theoretical torque constant ±10%	1.59	Nm / A (rms)
Torque constant ±10% @ rated load	1.40	Nm / A (rms)
Number of poles	10	
Electrical time constant	8.52	ms
Winding terminal resistance	0.88	Ω
Rotary field terminal inductance	7.5	mH

Customs info	
HS Code	85015220

Mechanical data (setting 5)		
Max mechanical speed	9000	rpm
Mech. time constant	0.70	ms
Thermal time constant	55	min
Rotor inertia	11.5	kgcm²
Protection	IP64	
Color	RAL 9005	
Cooling	Convection	
Motor-only mass	9.5	kg
Max. axial force 20kh	138	N
Max. radial force 20kh*	724	N
Max. axial force 100kh	80	N
Max. radial force 100kh*	423	N

** Defined for point of action at ½ output shaft length*

Sensors	
Temperature	PT1000 {PT1000}
Feedback	2-pole resolver (ER5Kd411, TS2620N21E11, RE-15-1-A15)

Brake		
Braking torque	18.00	Nm
Voltage	24	V DC
Power @20°C	24.0	W
Current @20°C	1.00	A
Inertia	2.00	kgcm²
Mass	1.80	kg

Torque / speed curve

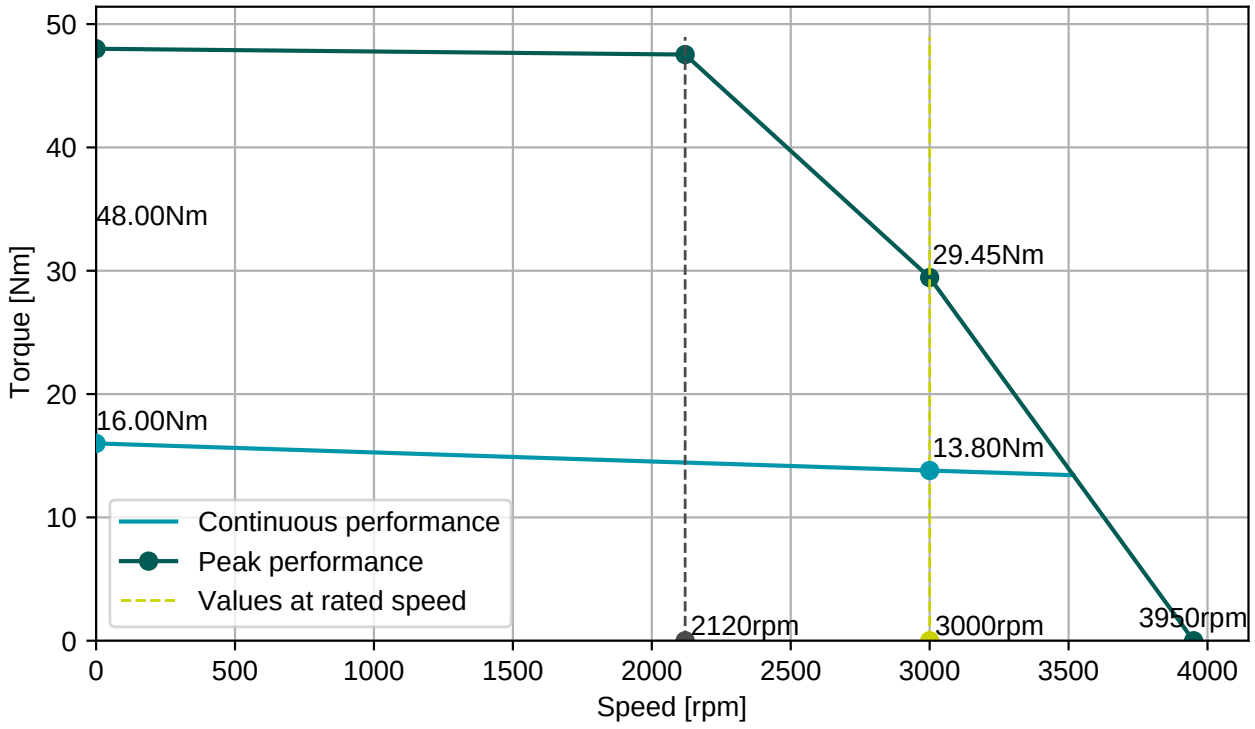

BGC110N00001216000
M23, 8 poles, rotary

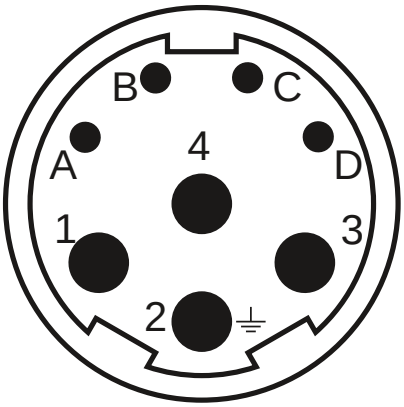

AGC052N00001215000
M23, 12 poles, rotary

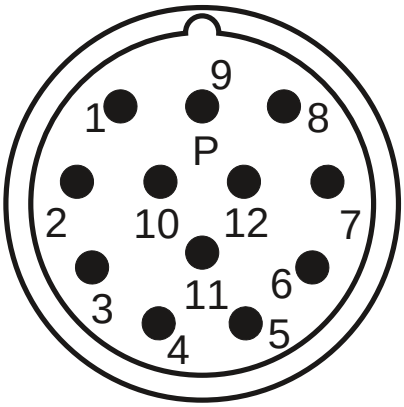

Connector 1 (9)	
1	U
4	V
3	W
2	PE
A	Brake+
B	Brake-
C	
D	

Connector 2 (10)	
2	Therm+
3	S4
4	S3
5	R2
6	Therm-
7	S2
8	S1
9	R1

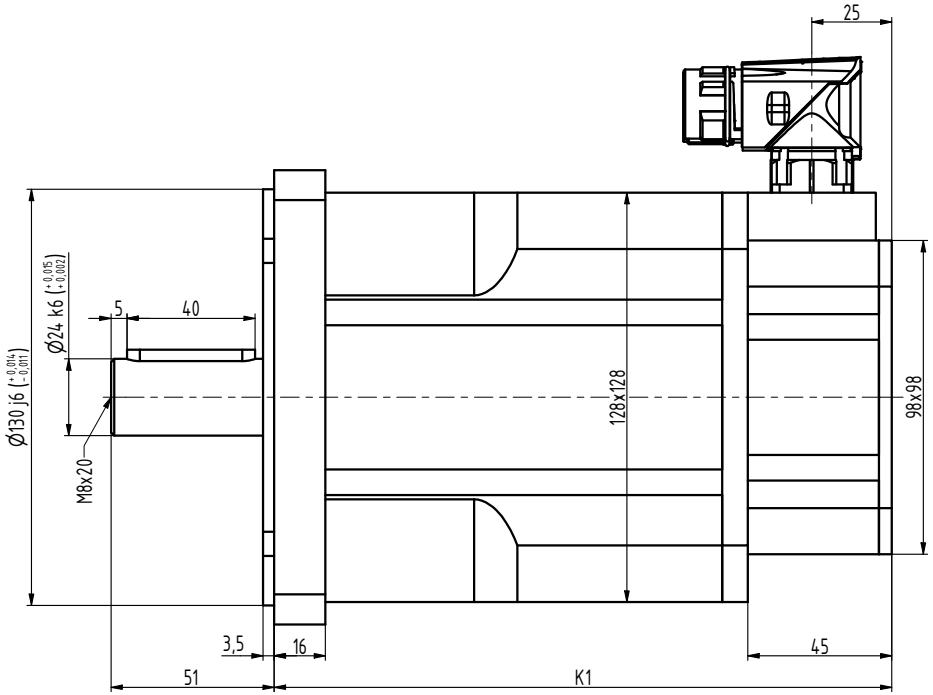

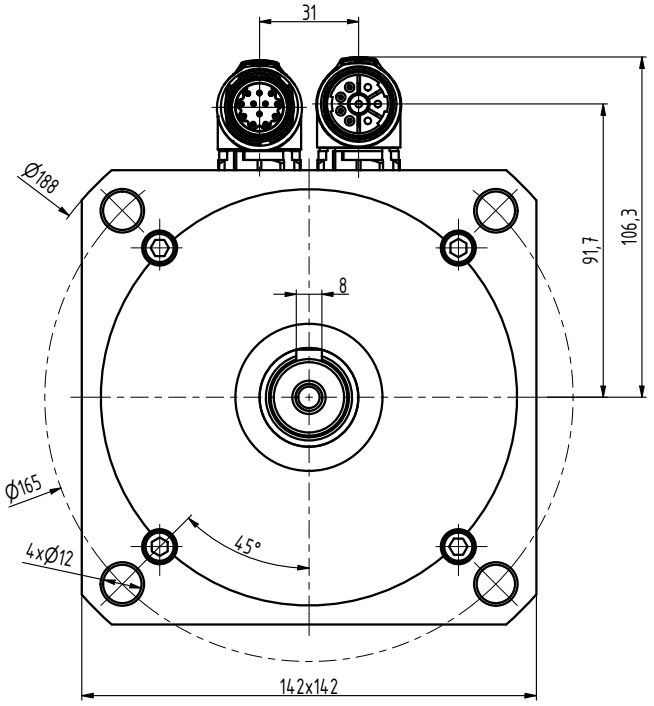

TYP	K1
N5-0650	163
N5-1200	193
N5-1600	223
N5-2000	253
N5-2400	283

INDEX	ZMĚNA	DATUM	PODPIS		
ZN.MAT.			T.O.	HMOTNOST kg	MĚŘ.
ROZM.-POLOT.					
POM. ZAŘ.				ČSN	TŘ.Č.
VYPR. Ošlejšek		NORM.REF.		POZN.	Č. KUSOVNÍKU
PŘEKR.					
TECHNOL.		SCHVÁLIL Ošlejšek	08.09.2021	STARÝ V.	Č.V.
NÁZEV: Motor N5				N5075 01 BP Z_S4_S1	
				Listů	List