Engineering data (WIN 863)		
DC bus voltage	560	V DC
Nominal AC voltage	380	V AC (rms)
Rated voltage	296	V AC (rms)
Rated power	6.3	kW
Rated speed	3000	rpm
Rated torque	20.00	Nm
Rated current	14.35	A (rms)
Peak torque	72	Nm
Peak current	47.9	A (rms)
Stall torque	24	Nm
Stall current	14	A (rms)
No load speed	3650	rpm
EMF constant ±10%	104	V AC (rms) / 1000rpm
Theoretical torque constant ±10%	1.72	Nm / A (rms)
Torque constant ±10% @ rated load	1.39	Nm / A (rms)
Number of poles	10	
Electrical time constant	8.93	ms
Winding terminal resistance	0.56	Ω
Rotary field terminal inductance	5	mH

Customs info	
HS Code	85015220

Mechanical data (setting 5)		
Max mechanical speed	9000	rpm
Mech. time constant	0.61	ms
Thermal time constant	75	min
Rotor inertia	18.7	kgcm²
Protection	IP64	
Color	RAL 9005	
Cooling	Convection	
Motor-only mass	11.2	kg
Max. axial force 20kh	147	N
Max. radial force 20kh*	775	N
Max. axial force 100kh	86	N
Max. radial force 100kh*	453	N

** Defined for point of action at ½ output shaft length*

Sensors	
Temperature	PT1000 {PT1000}
Feedback	2-pole resolver (ER5Kd411, TS2620N21E11, RE-15-1-A15)

Brake		
Braking torque	18.00	Nm
Voltage	24	V DC
Power @20°C	24.0	W
Current @20°C	1.00	A
Inertia	2.00	kgcm²
Mass	1.80	kg

Torque / speed curve

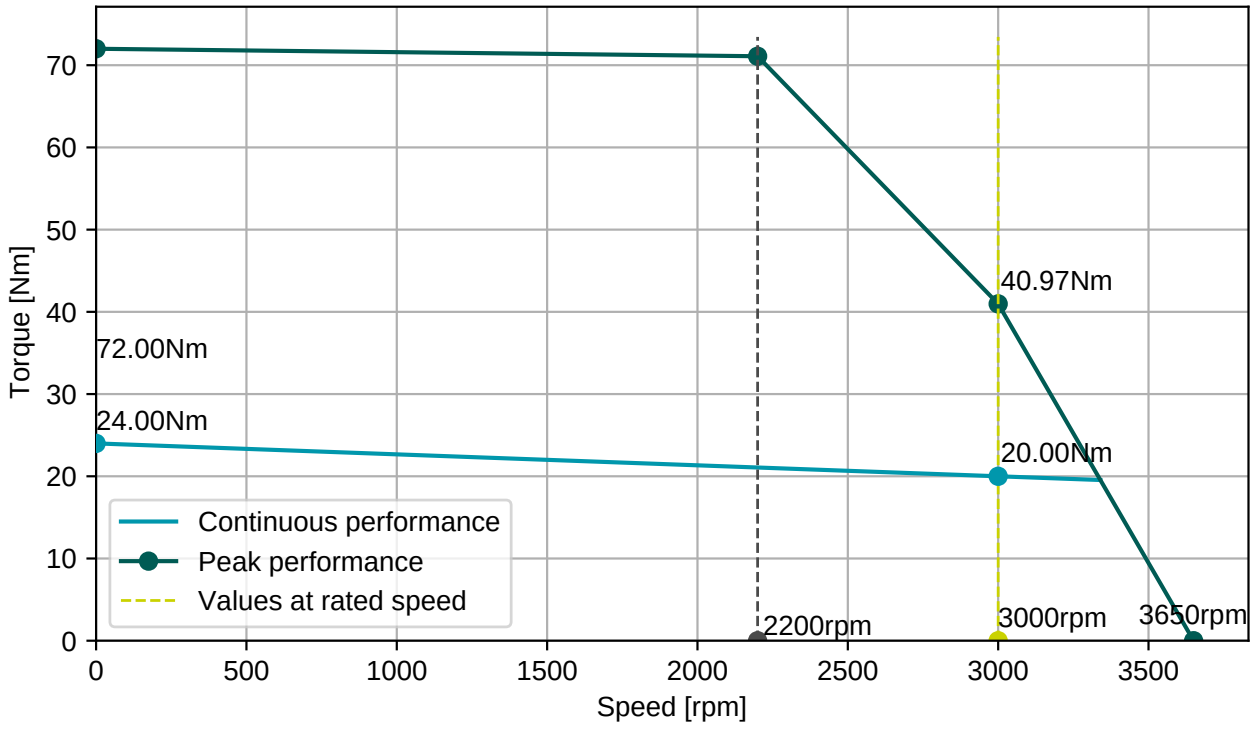

BGC110N00001216000
M23, 8 poles, rotary

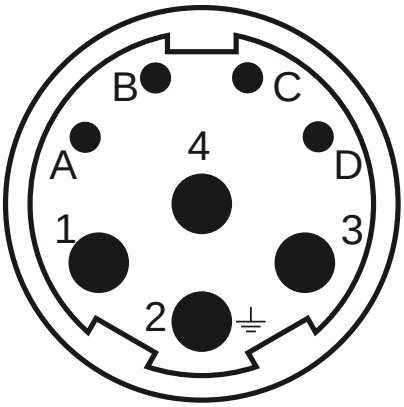

AGC052N00001215000
M23, 12 poles, rotary

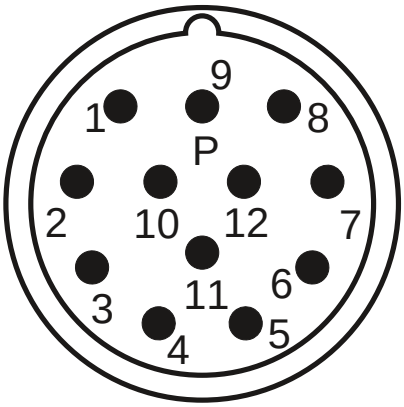

Connector 1 (9)	
1	U
4	V
3	W
2	PE
A	Brake+
B	Brake-
C	
D	

Connector 2 (10)	
2	Therm+
3	S4
4	S3
5	R2
6	Therm-
7	S2
8	S1
9	R1

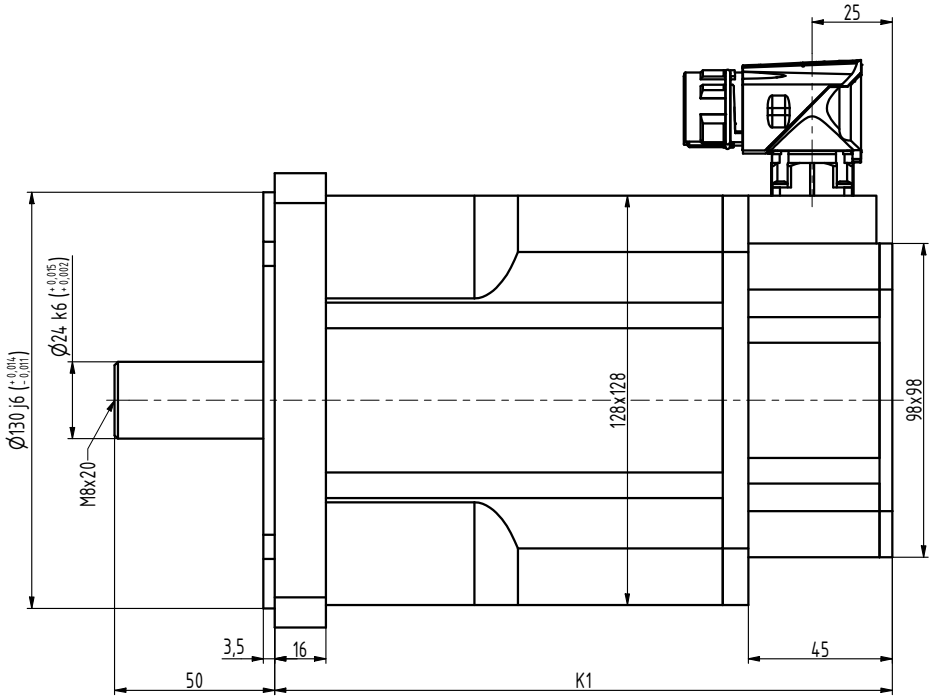

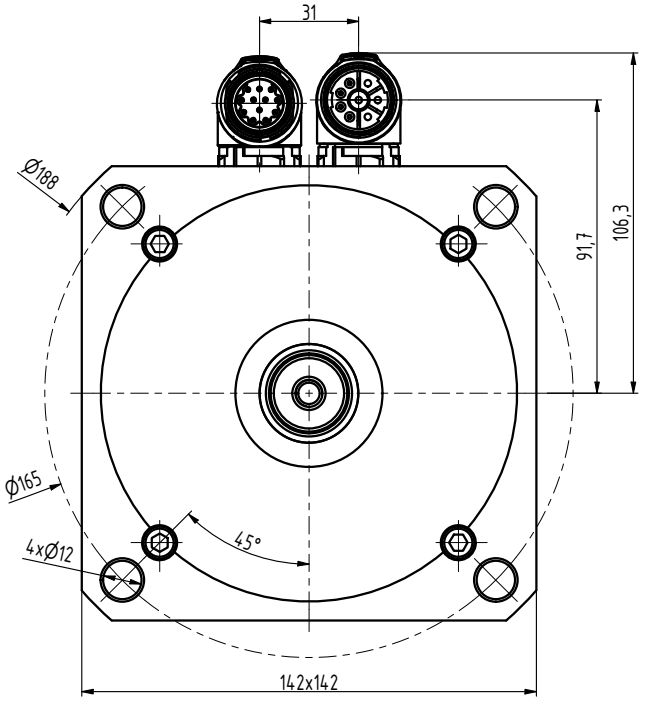

TYP	K1
N5-0650	163
N5-1200	193
N5-1600	223
N5-2000	253
N5-2400	283

INDEX	ZMĚNA	DATUM	PODPIS		
ZN.MAT.			T.O.	HMOTNOST kg	MĚŘ.
ROZM.-POLOT.					
POM. ZAŘ.				ČSN	TŘ.Č.
VYPR. Ošlejšek		NORM.REF.		POZN.	Č. KUSOVNÍKU
PŘEKR.					
TECHNOL.		SCHVÁLIL Ošlejšek	08.09.2021	STARÝ V.	Č.V.

NÁZEV
Motor N5

N5075 01 B Z_S4_S1

Listů List