| Engineering data (WIN 1156) | | |
|---|---|---|
| DC bus voltage | 560 | V DC |
| Nominal AC voltage | 380 | V AC (rms) |
| Rated voltage | 264 | V AC (rms) |
| Rated power | 1.3 | kW |
| Rated speed | 5000 | rpm |
| Rated torque | 2.40 | Nm |
| Rated current | 4.22 | A (rms) |
| Peak torque | 10.2 | Nm |
| Peak current | 18.9 | A (rms) |
| Stall torque | 3.4 | Nm |
| Stall current | 4.15 | A (rms) |
| No load speed | 7600 | rpm |
| EMF constant ±10% | 49.5 | V AC (rms) / 1000rpm |
| Theoretical torque constant ±10% | 0.82 | Nm / A (rms) |
| Torque constant ±10% @ rated load | 0.57 | Nm / A (rms) |
| Number of poles | 10 | |
| Electrical time constant | 4.63 | ms |
| Winding terminal resistance | 2.57 | Ω |
| Rotary field terminal inductance | 11.9 | mH |

| Customs info | |
|---|---|
| HS Code | 85015220 |

| Mechanical data (setting 5) | | |
|---|---|---|
| Max mechanical speed | 9000 | rpm |
| Mech. time constant | 1.35 | ms |
| Thermal time constant | 25 | min |
| Rotor inertia | 2.04 | kgcm² |
| Protection | IP64 | |
| Color | RAL 9005 | |
| Cooling | Convection | |
| Motor-only mass | 3 | kg |
| Max. axial force 20kh | 57 | N |
| Max. radial force 20kh* | 300 | N |
| Max. axial force 100kh | 33 | N |
| Max. radial force 100kh* | 176 | N |

** Defined for point of action at ½ output shaft length*

| Sensors | |
|---|---|
| Temperature | PT1000 {PT1000} |
| Feedback | 2-pole resolver ( ER5Kd411, TS2620N21E11, RE-15-1-A15) |

Torque / speed curve

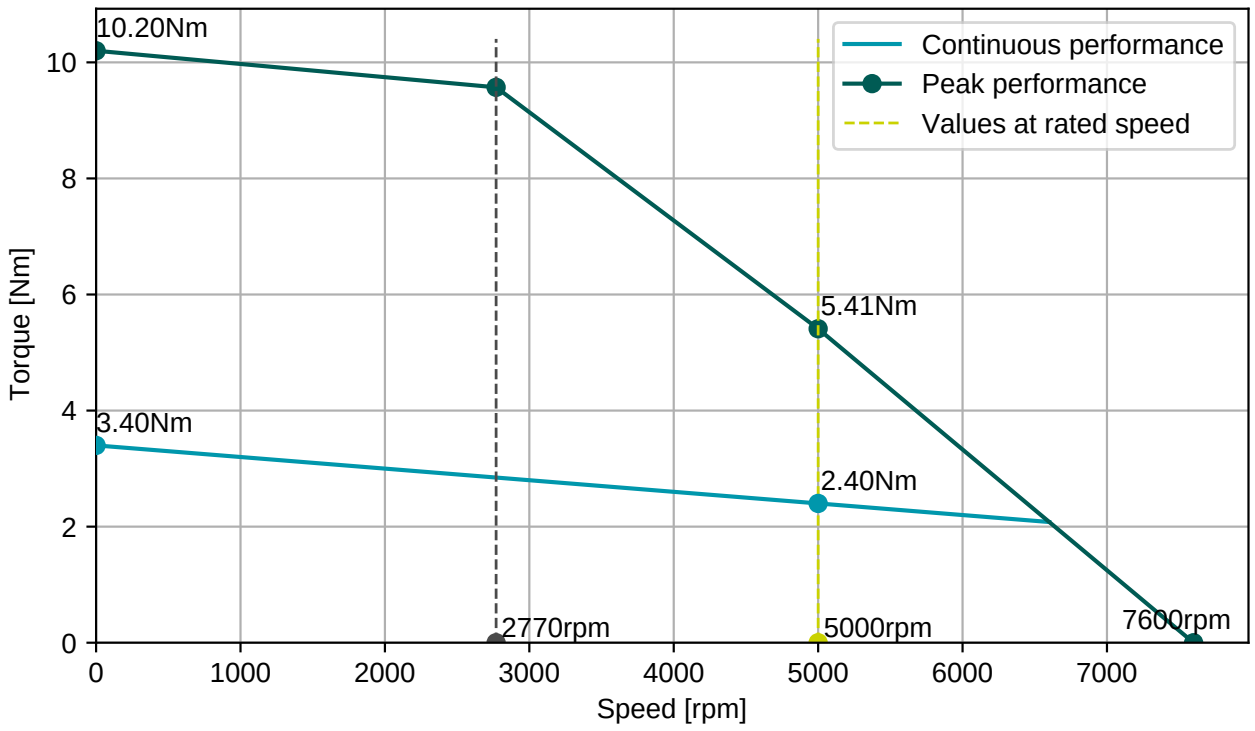


**BGC110N00001216000**
M23, 8 poles, rotary

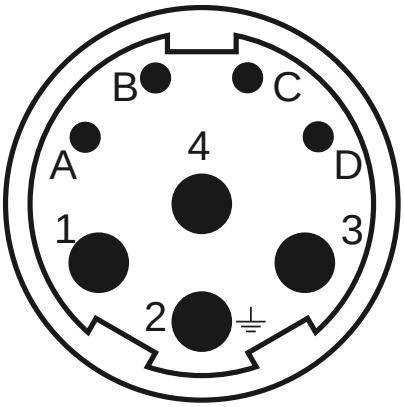


**AGC052N00001215000**
M23, 12 poles, rotary

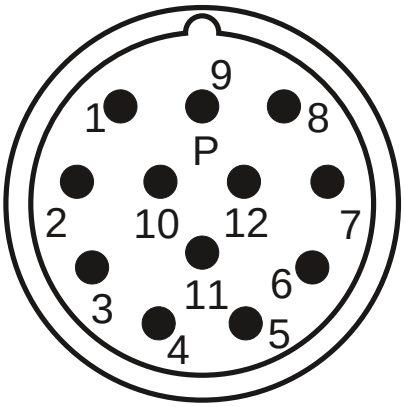


| Connector 1 (9) | |
|---|---|
| **1** | U |
| **4** | V |
| **3** | W |
| **2** | PE |
| **A** | Brake+ |
| **B** | Brake- |
| **C** | |
| **D** | |

| Connector 2 (10) | |
|---|---|
| **2** | Therm+ |
| **3** | S4 |
| **4** | S3 |
| **5** | R2 |
| **6** | Therm- |
| **7** | S2 |
| **8** | S1 |
| **9** | R1 |

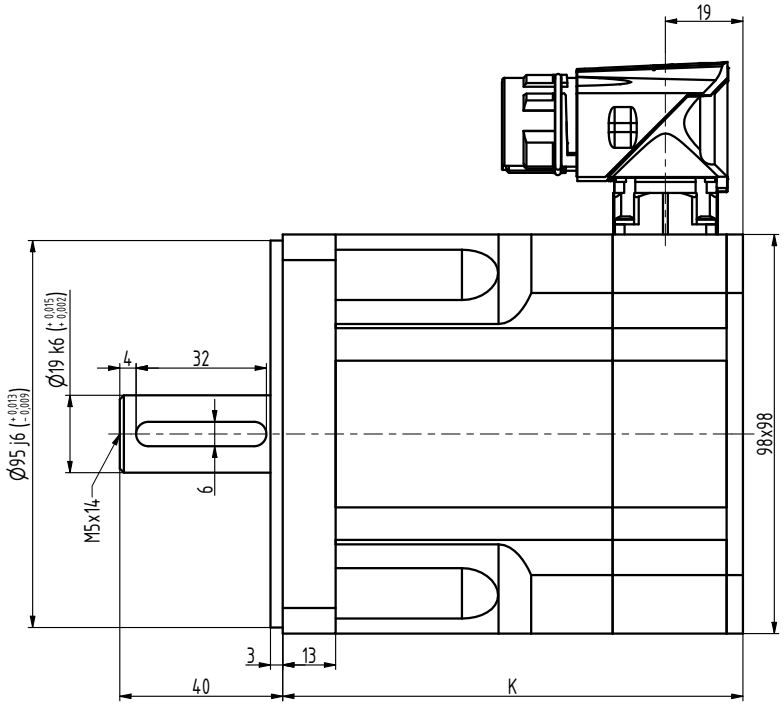


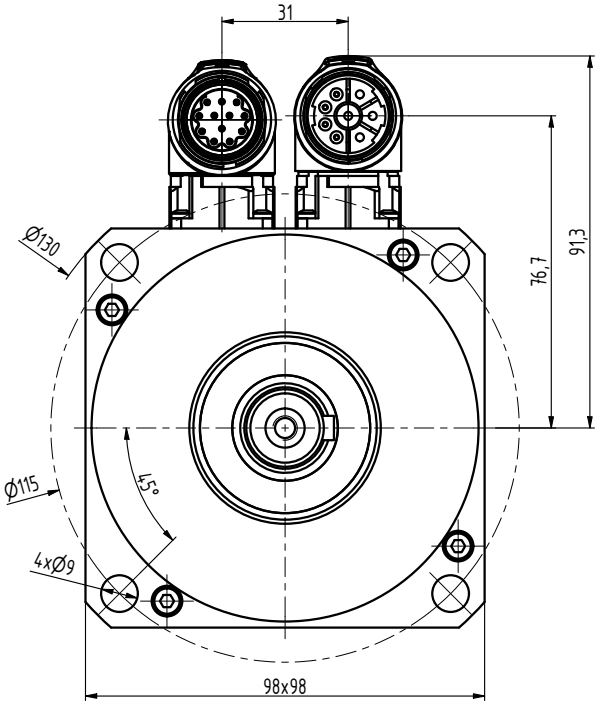


| TYP | K |
|---|---|
| N4-0340 | 98 |
| N4-0510 | 113 |
| N4-0750 | 143 |
| N4-0960 | 173 |
| N4-1130 | 203 |

| INDEX | ZMĚNA | DATUM | PODPIS | | |
|---|---|---|---|---|---|
| ZN.MAT. | | | T.O. | HMOTNOST kg | MĚŘ. |
| ROZM.-POLOT. | | | | | |
| POM. ZAŘ. | | | | ČSN | TŘ.Č. |
| VYPR. Ošlejšek | | NORM.REF. | | POZN. | Č. KUSOVNÍKU |
| PŘEKR. | | | | | |
| TECHNOL. | | SCHVÁLIL Ošlejšek | 09.07.2021 | STARÝ V. | Č.V. |
| NÁZEV | | | | | |
| Motor N4 | | | | N4083 00 P Z_S4_S1 | |
| | | | | Listů | List |