| Engineering data (WIN 707) | | |
|---|---|---|
| DC bus voltage | 560 | V DC |
| Nominal AC voltage | 380 | V AC (rms) |
| Rated voltage | 278 | V AC (rms) |
| Rated power | 942 | W |
| Rated speed | 3000 | rpm |
| Rated torque | 3.00 | Nm |
| Rated current | 2.42 | A (rms) |
| Peak torque | 10.5 | Nm |
| Peak current | 10.9 | A (rms) |
| Stall torque | 3.5 | Nm |
| Stall current | 2.38 | A (rms) |
| No load speed | 4260 | rpm |
| EMF constant ±10% | 89 | V AC (rms) / 1000rpm |
| Theoretical torque constant ±10% | 1.47 | Nm / A (rms) |
| Torque constant ±10% @ rated load | 1.24 | Nm / A (rms) |
| Number of poles | 10 | |
| Electrical time constant | 2.87 | ms |
| Winding terminal resistance | 8.89 | Ω |
| Rotary field terminal inductance | 25.5 | mH |

| Customs info | |
|---|---|
| HS Code | 85015220 |

| Mechanical data (setting 5) | | |
|---|---|---|
| Max mechanical speed | 12000 | rpm |
| Mech. time constant | 0.74 | ms |
| Thermal time constant | 27 | min |
| Rotor inertia | 1.04 | kgcm² |
| Protection | IP64 | |
| Color | RAL 9005 | |
| Cooling | Convection | |
| Motor-only mass | 2.9 | kg |
| Max. axial force 20kh | 68 | N |
| Max. radial force 20kh* | 356 | N |
| Max. axial force 100kh | 40 | N |
| Max. radial force 100kh* | 208 | N |

** Defined for point of action at ½ output shaft length*

| Sensors | |
|---|---|
| Temperature | PT1000 {PT1000} |
| Feedback | 2-pole resolver ( ER5Kd411, TS2620N21E11, RE-15-1-A15) |

Torque / speed curve

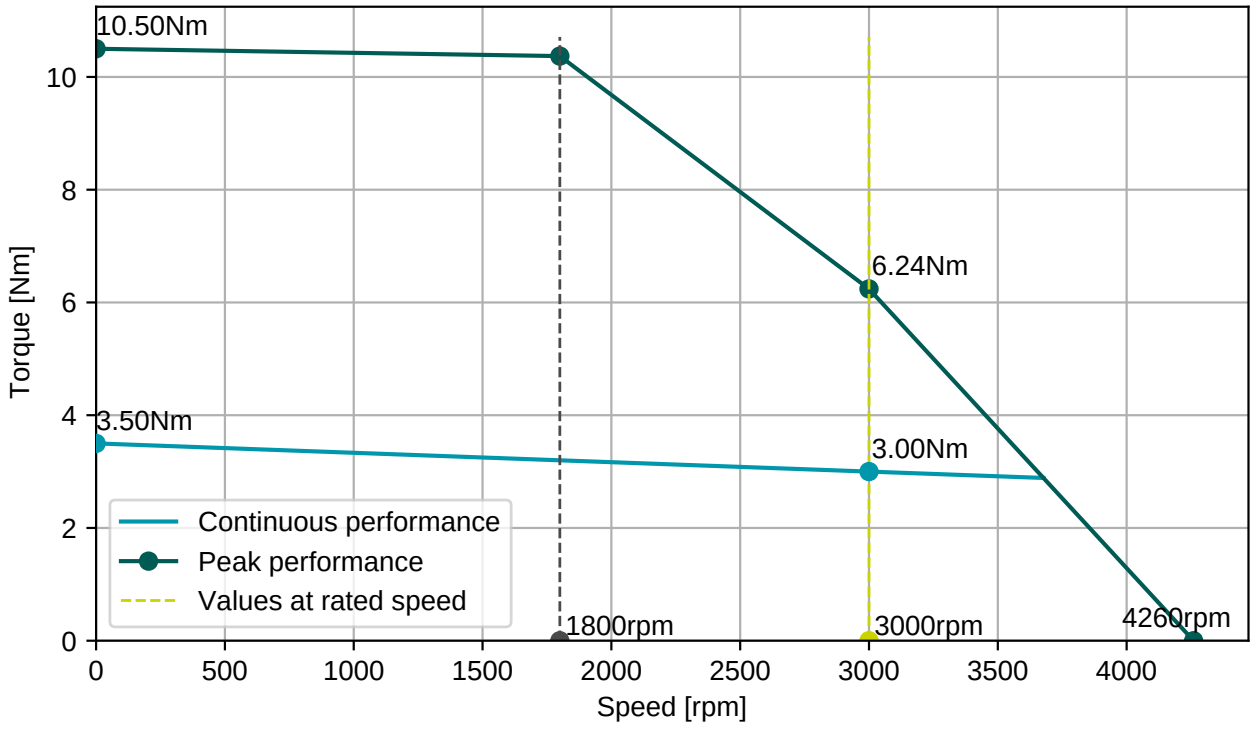


**BGC110N00001216000**
M23, 8 poles, rotary

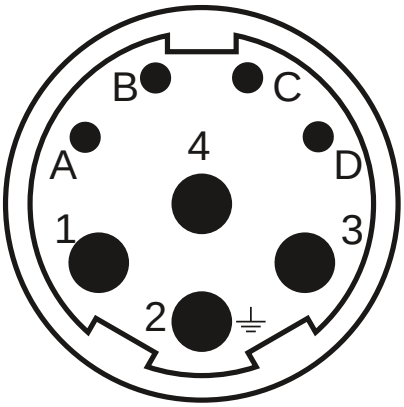


**AGC052N00001215000**
M23, 12 poles, rotary

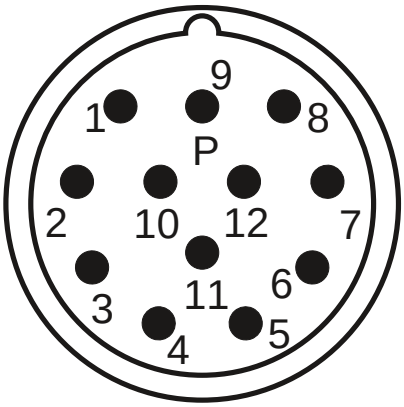


| Connector 1 (9) | |
|---|---|
| **1** | U |
| **4** | V |
| **3** | W |
| **2** | PE |
| **A** | Brake+ |
| **B** | Brake- |
| **C** | |
| **D** | |

| Connector 2 (10) | |
|---|---|
| **2** | Therm+ |
| **3** | S4 |
| **4** | S3 |
| **5** | R2 |
| **6** | Therm- |
| **7** | S2 |
| **8** | S1 |
| **9** | R1 |

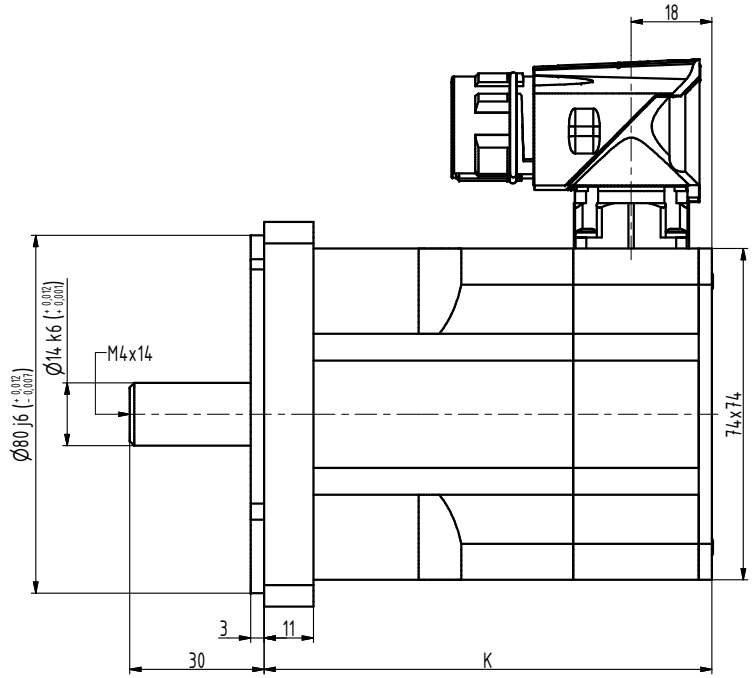


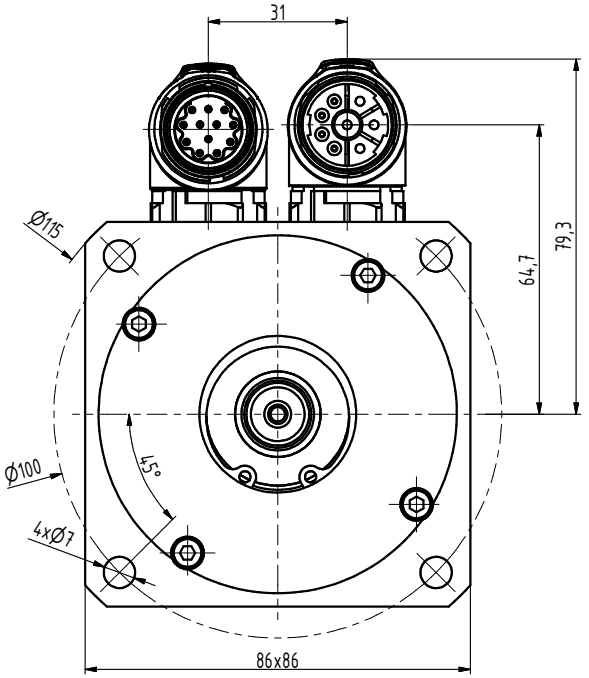


| TYP | K |
|---|---|
| N3-0115 | 82 |
| N3-0205 | 100 |
| N3-0280 | 118 |
| N3-0350 | 136 |
| N3-0420 | 154 |
| N3-0480 | 172 |

| INDEX | ZMĚNA | DATUM | PODPIS |
|---|---|---|---|
| | | | |

| | | | | |
|---|---|---|---|---|
| ZN.MAT. | | T.O. | HMOTNOST kg | MĚŘ. |
| ROZM.-POLOT. | | | | |
| POM. ZAŘ. | | | ČSN | TŘ.Č. |
| VYPR. Ošlejšek | NORM.REF. | | POZN. | Č. KUSOVNÍKU |
| PŘEKR. Ošlejšek 4.11.2020 | | | | |
| TECHNOL. | SCHVÁLIL Ošlejšek | 18.10.2009 | STARÝ V. | Č.V. |

NÁZEV
Motor N3

N3111 00 Z_S4_S1

Listů List