| Engineering data (WIN 887) | | |
|---|---|---|
| DC bus voltage | 560 | V DC |
| Nominal AC voltage | 380 | V AC (rms) |
| Rated voltage | 118 | V AC (rms) |
| Rated power | 118 | W |
| Rated speed | 4500 | rpm |
| Rated torque | 0.25 | Nm |
| Rated current | 0.96 | A (rms) |
| Peak torque | 1.12 | Nm |
| Peak current | 4.4 | A (rms) |
| Stall torque | 0.28 | Nm |
| Stall current | 0.97 | A (rms) |
| No load speed | 21170 | rpm |
| EMF constant ±10% | 17.5 | V AC (rms) / 1000rpm |
| Theoretical torque constant ±10% | 0.29 | Nm / A (rms) |
| Torque constant ±10% @ rated load | 0.26 | Nm / A (rms) |
| Number of poles | 6 | |
| Electrical time constant | 1.00 | ms |
| Winding terminal resistance | 26.9 | Ω |
| Rotary field terminal inductance | 26.8 | mH |

| Customs info | |
|---|---|
| HS Code | 85015100 |

| Mechanical data (setting 5) | | |
|---|---|---|
| Max mechanical speed | 12000 | rpm |
| Mech. time constant | 2.78 | ms |
| Thermal time constant | 10 | min |
| Rotor inertia | 0.05 | kgcm² |
| Protection | IP64 | |
| Color | RAL 9005 | |
| Cooling | Convection | |
| Motor-only mass | 1.2 | kg |
| Max. axial force 20kh | 41 | N |
| Max. radial force 20kh* | 216 | N |
| Max. axial force 100kh | 24 | N |
| Max. radial force 100kh* | 126 | N |

** Defined for point of action at ½ output shaft length*

| Sensors | |
|---|---|
| Temperature | PT1000 {PT1000} |
| Feedback | 2-pole resolver ( ER5Kd411, TS2620N21E11, RE-15-1-A15) |

| Brake | | |
|---|---|---|
| Braking torque | 2.00 | Nm |
| Voltage | 24 | V DC |
| Power @20°C | 11.0 | W |
| Current @20°C | 0.46 | A |
| Inertia | 0.08 | kgcm² |
| Mass | 0.20 | kg |

Torque / speed curve

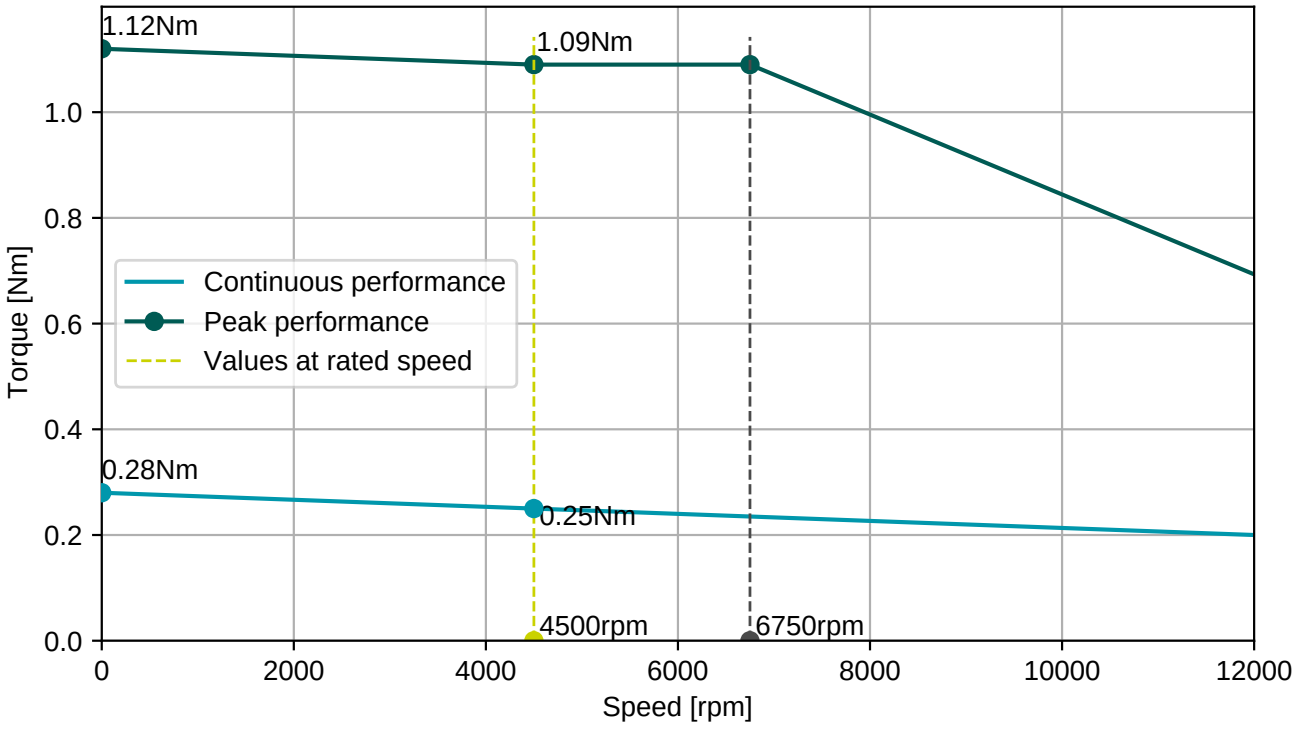


**BGC110N00001216000**

M23, 8 poles, rotary

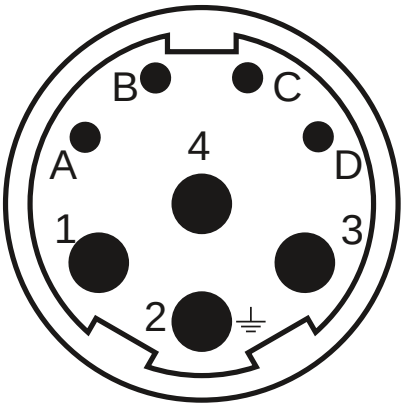


**AGC052N00001215000**

M23, 12 poles, rotary

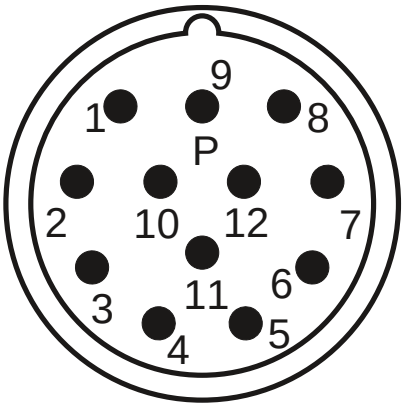


| Connector 1 (9) | |
|---|---|
| **1** | U |
| **4** | V |
| **3** | W |
| **2** | PE |
| **A** | Brake+ |
| **B** | Brake- |
| **C** | |
| **D** | |

| Connector 2 (10) | |
|---|---|
| **2** | Therm+ |
| **3** | S4 |
| **4** | S3 |
| **5** | R2 |
| **6** | Therm- |
| **7** | S2 |
| **8** | S1 |
| **9** | R1 |

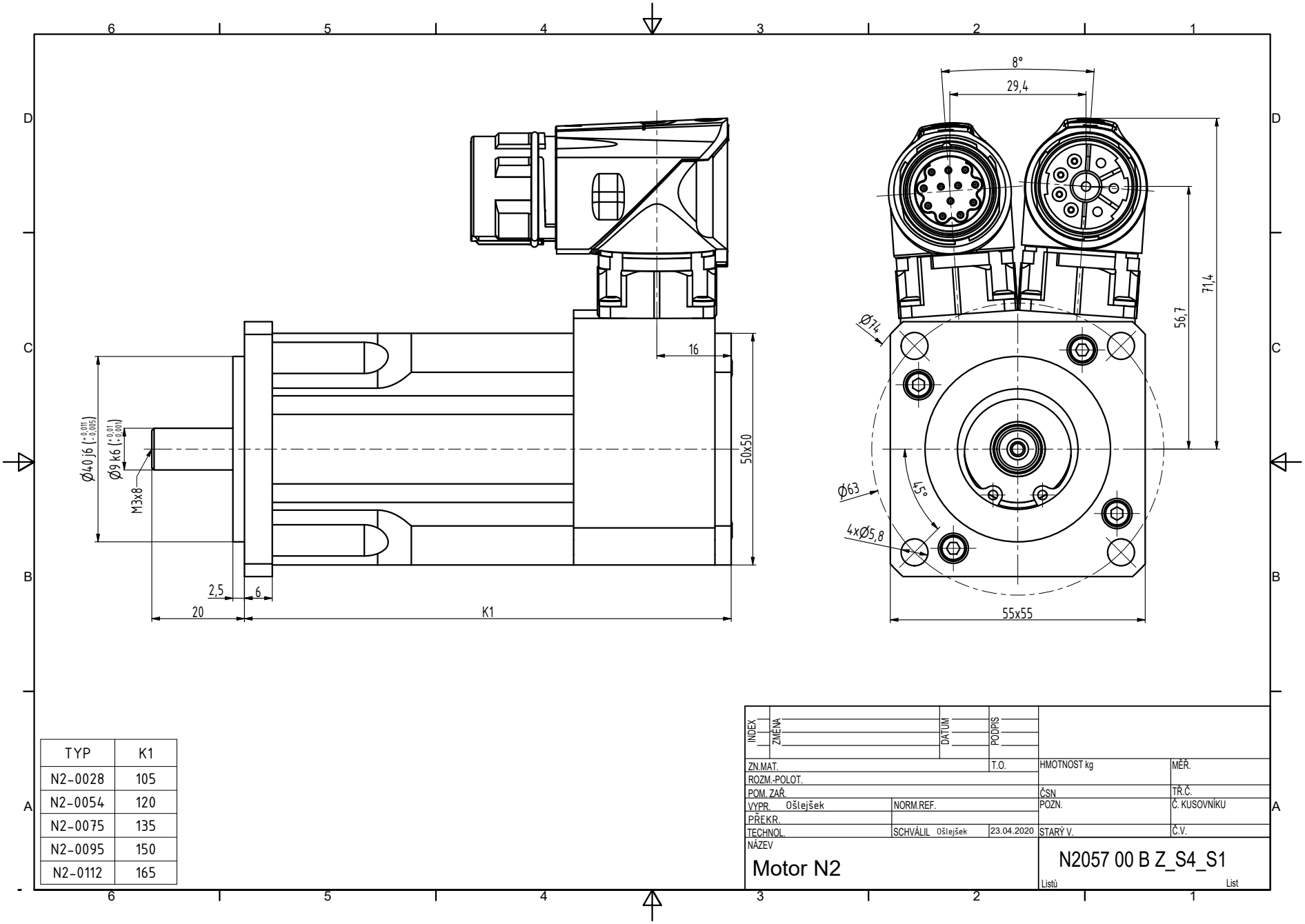


| TYP | K1 |
|---|---|
| N2-0028 | 105 |
| N2-0054 | 120 |
| N2-0075 | 135 |
| N2-0095 | 150 |
| N2-0112 | 165 |

| INDEX | ZMĚNA | DATUM | PODPIS |
|---|---|---|---|
| | | | |

| | | | | |
|---|---|---|---|---|
| ZN.MAT. | | T.O. | HMOTNOST kg | MĚŘ. |
| ROZM.-POLOT. | | | | |
| POM. ZAŘ. | | | ČSN | TŘ.Č. |
| VYPR. Ošlejšek | NORM.REF. | | POZN. | Č. KUSOVNÍKU |
| PŘEKR. | | | | |
| TECHNOL. | SCHVÁLIL Ošlejšek | 23.04.2020 | STARÝ V. | Č.V. |

NÁZEV

Motor N2

N2057 00 B Z_S4_S1

Listů List