Engineering data (WIN 1270)		
DC bus voltage	560	V DC
Nominal AC voltage	380	V AC (rms)
Rated voltage	276	V AC (rms)
Rated power	490	W
Rated speed	6000	rpm
Rated torque	0.78	Nm
Rated current	1.27	A (rms)
Peak torque	4.94	Nm
Peak current	8.33	A (rms)
Stall torque	1.3	Nm
Stall current	1.77	A (rms)
No load speed	8140	rpm
EMF constant ±10%	44.5	V AC (rms) / 1000rpm
Theoretical torque constant ±10%	0.734	Nm / A (rms)
Torque constant ±10% @ rated load	0.614	Nm / A (rms)
Number of poles	10	
Electrical time constant	1.44	ms
Winding terminal resistance	9.598	Ω
Rotary field terminal inductance	13.8	mH

Customs info	
HS Code	85015100

Mechanical data (setting 48)		
Max mechanical speed	12000	rpm
Mech. time constant	1.53	ms
Thermal time constant	24	min
Rotor inertia	0.5	kgcm²
Protection	IP64	
Color	RAL 9005	
Cooling	Convection	
Motor-only mass	1.6	kg
Max. axial force 20kh	43	N
Max. radial force 20kh*	225	N
Max. axial force 100kh	25	N
Max. radial force 100kh*	131	N

** Defined for point of action at ½ output shaft length*

Sensors	
Temperature	PT1000 {PT1000}
Feedback	EEM37 (HDSL) multi-turn, 17+12 bits

Torque / speed curve

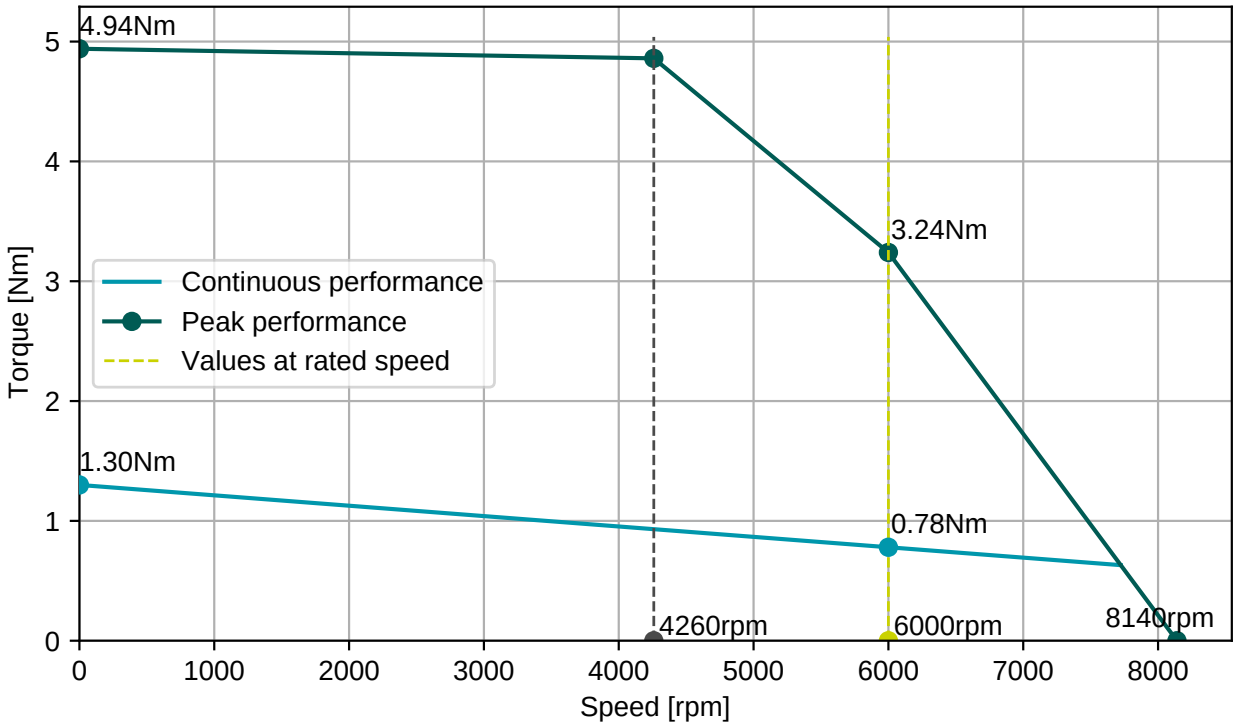

BGC110N00001216000

M23, 8 poles, rotary

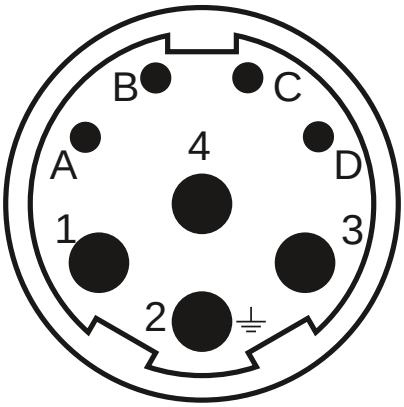

Connector 1 (283)	
1	U
4	V
3	W
2	PE
A	Brake+
B	Brake-
C	GND/DSL-
D	+Us/DSL+

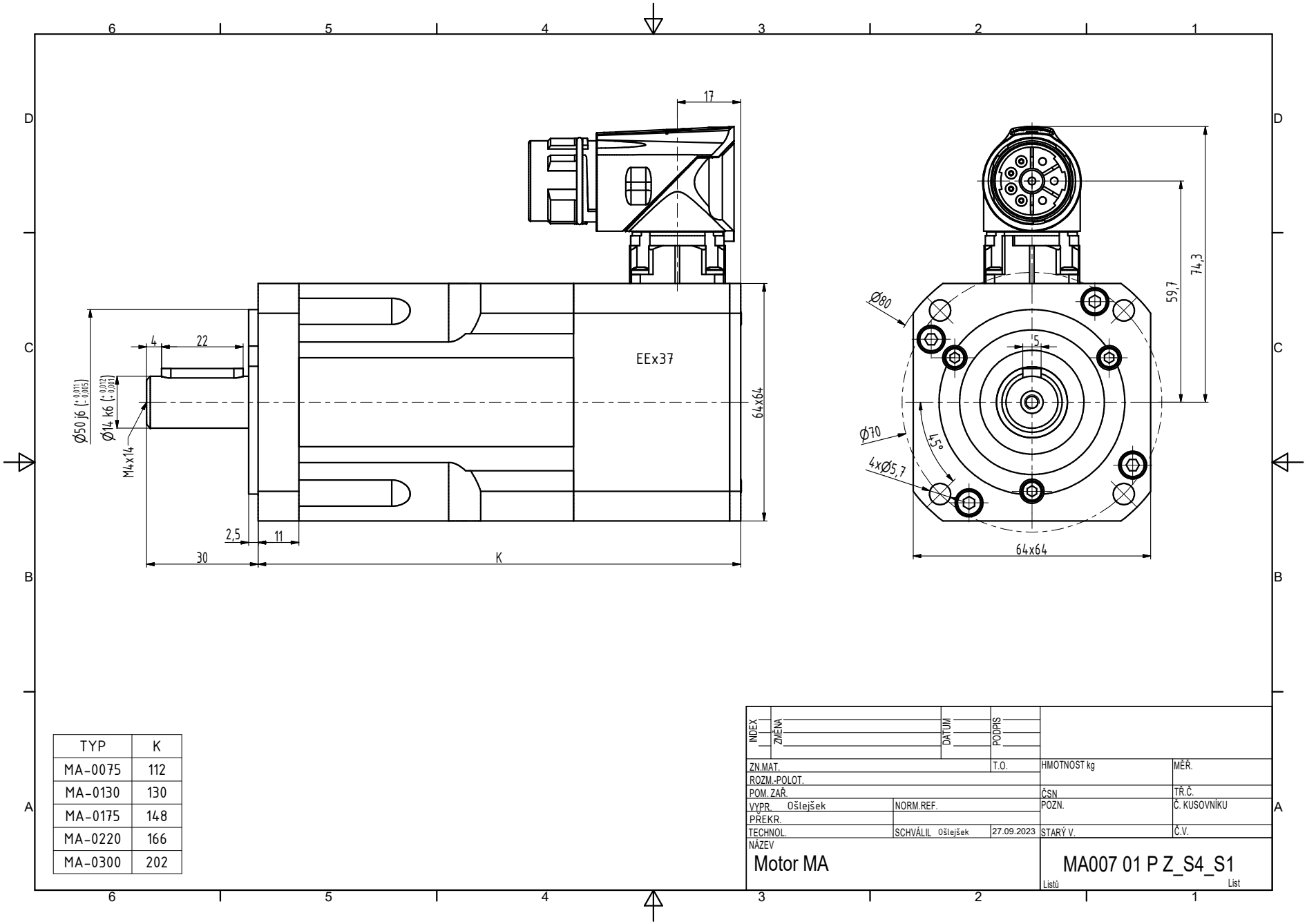

TYP	K
MA-0075	112
MA-0130	130
MA-0175	148
MA-0220	166
MA-0300	202