| Engineering data (WIN 1620) | | |
|---|---|---|
| DC bus voltage | 320 | V DC |
| Nominal AC voltage | 220 | V AC (rms) |
| Rated voltage | 162 | V AC (rms) |
| Rated power | 624 | W |
| Rated speed | 4000 | rpm |
| Rated torque | 1.49 | Nm |
| Rated current | 2.68 | A (rms) |
| Peak torque | 11.4 | Nm |
| Peak current | 18.8 | A (rms) |
| Stall torque | 3 | Nm |
| Stall current | 4.37 | A (rms) |
| No load speed | 5280 | rpm |
| EMF constant ±10% | 41.5 | V AC (rms) / 1000rpm |
| Theoretical torque constant ±10% | 0.686 | Nm / A (rms) |
| Torque constant ±10% @ rated load | 0.556 | Nm / A (rms) |
| Number of poles | 10 | |
| Electrical time constant | 1.62 | ms |
| Winding terminal resistance | 2.479 | Ω |
| Rotary field terminal inductance | 4.02 | mH |

| Customs info | |
|---|---|
| HS Code | 85015100 |

| Mechanical data (setting 48) | | |
|---|---|---|
| Max mechanical speed | 12000 | rpm |
| Mech. time constant | 1.09 | ms |
| Thermal time constant | 40 | min |
| Rotor inertia | 1.2 | kgcm² |
| Protection | IP64 | |
| Color | RAL 9005 | |
| Cooling | Convection | |
| Motor-only mass | 2.8 | kg |
| Max. axial force 20kh | 61 | N |
| Max. radial force 20kh* | 324 | N |
| Max. axial force 100kh | 36 | N |
| Max. radial force 100kh* | 189 | N |

** Defined for point of action at ½ output shaft length*

| Sensors | |
|---|---|
| Temperature | PT1000 {PT1000} |
| Feedback | EEM37 (HDSL) multi-turn, 17+12 bits |

Torque / speed curve

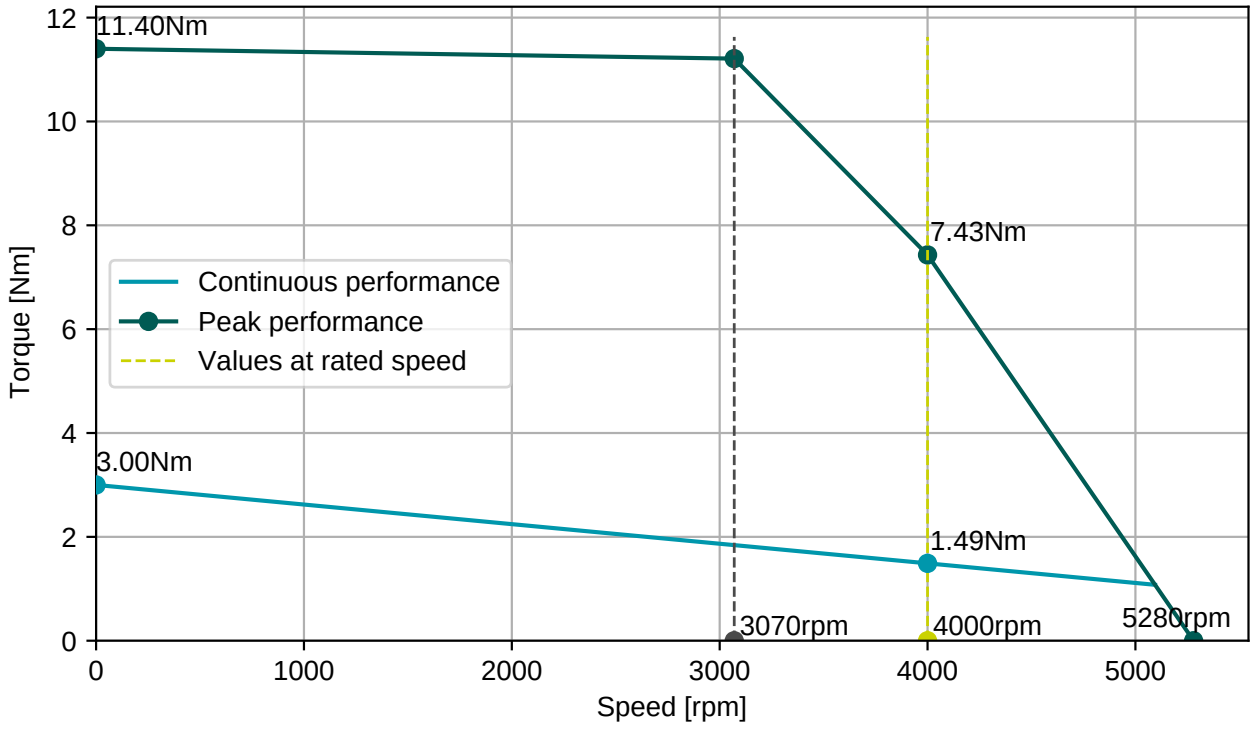


**EGA201N00000800000**

M15, 9 poles, rotary

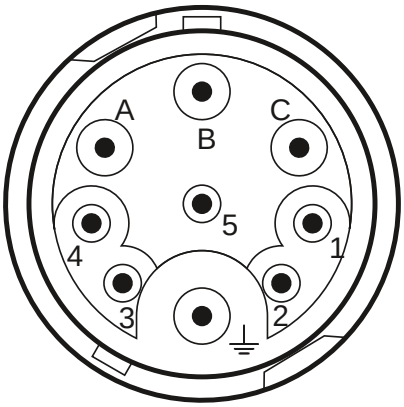


| Connector 1 (304) | |
|---|---|
| **A** | U |
| **B** | V |
| **C** | W |
| **PE** | PE |
| **1** | Brake+ |
| **2** | Brake- |
| **3** | +Us/DSL+ |
| **4** | GND/DSL- |

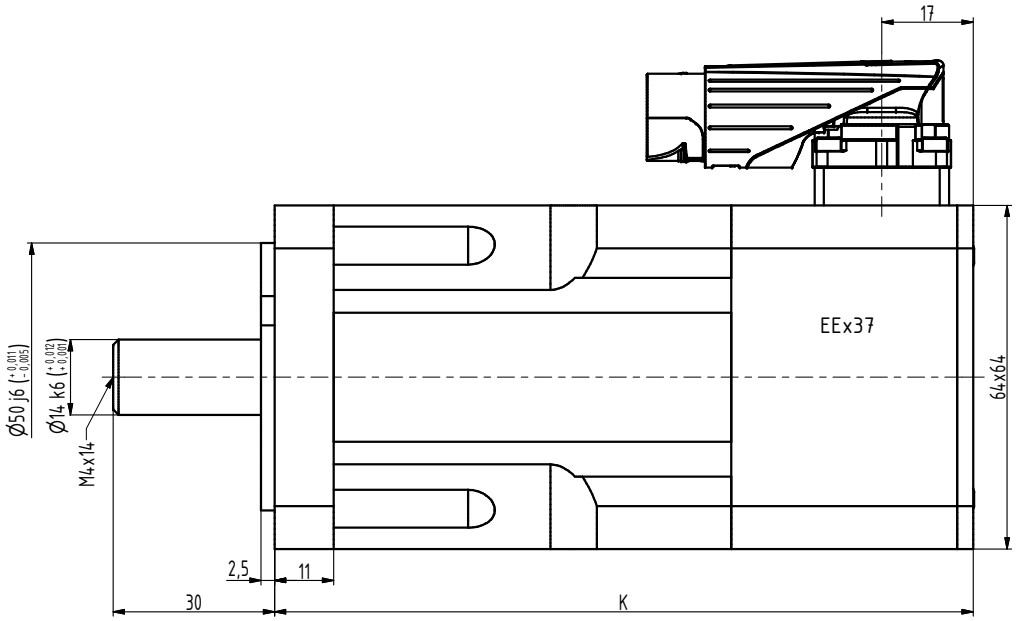


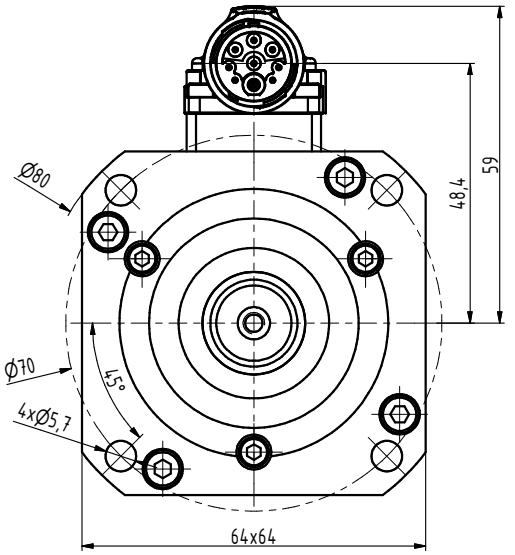


| TYP | K |
|---|---|
| MA-0075 | 112 |
| MA-0130 | 130 |
| MA-0175 | 148 |
| MA-0220 | 166 |
| MA-0300 | 202 |

| INDEX | ZMĚNA | DATUM | PODPIS |
|---|---|---|---|
| | | | |

| | | | | |
|---|---|---|---|---|
| ZN.MAT. | | T.O. | HMOTNOST kg | MĚŘ. |
| ROZM.-POLOT. | | | | |
| POM. ZAŘ. | | | ČSN | TŘ.Č. |
| VYPR. Ošlejšek | NORM.REF. | | POZN. | Č. KUSOVNÍKU |
| PŘEKR. | | | | |
| TECHNOL. | SCHVÁLIL Ošlejšek | 05.12.2024 | STARÝ V. | Č.V. |

NÁZEV

Motor MA

MA007 03 Z_I_S1

Listů List