Engineering data (WIN 1343)		
DC bus voltage	560	V DC
Nominal AC voltage	380	V AC (rms)
Rated voltage	199	V AC (rms)
Rated power	327	W
Rated speed	6000	rpm
Rated torque	0.52	Nm
Rated current	1.19	A (rms)
Peak torque	2.47	Nm
Peak current	5.9	A (rms)
Stall torque	0.75	Nm
Stall current	1.44	A (rms)
No load speed	12000	rpm
EMF constant ±10%	31.5	V AC (rms) / 1000rpm
Theoretical torque constant ±10%	0.521	Nm / A (rms)
Torque constant ±10% @ rated load	0.437	Nm / A (rms)
Number of poles	10	
Electrical time constant	1.13	ms
Winding terminal resistance	12.438	Ω
Rotary field terminal inductance	14.1	mH

Customs info	
HS Code	85015100

Mechanical data (setting 48)		
Max mechanical speed	12000	rpm
Mech. time constant	2.62	ms
Thermal time constant	20	min
Rotor inertia	0.33	kgcm²
Protection	IP64	
Color	RAL 9005	
Cooling	Convection	
Motor-only mass	1.3	kg
Max. axial force 20kh	37	N
Max. radial force 20kh*	195	N
Max. axial force 100kh	22	N
Max. radial force 100kh*	114	N

** Defined for point of action at ½ output shaft length*

Sensors	
Temperature	PT1000 {PT1000}
Feedback	EDM35 (HDSL) multi-turn, 20+12 bits

Torque / speed curve

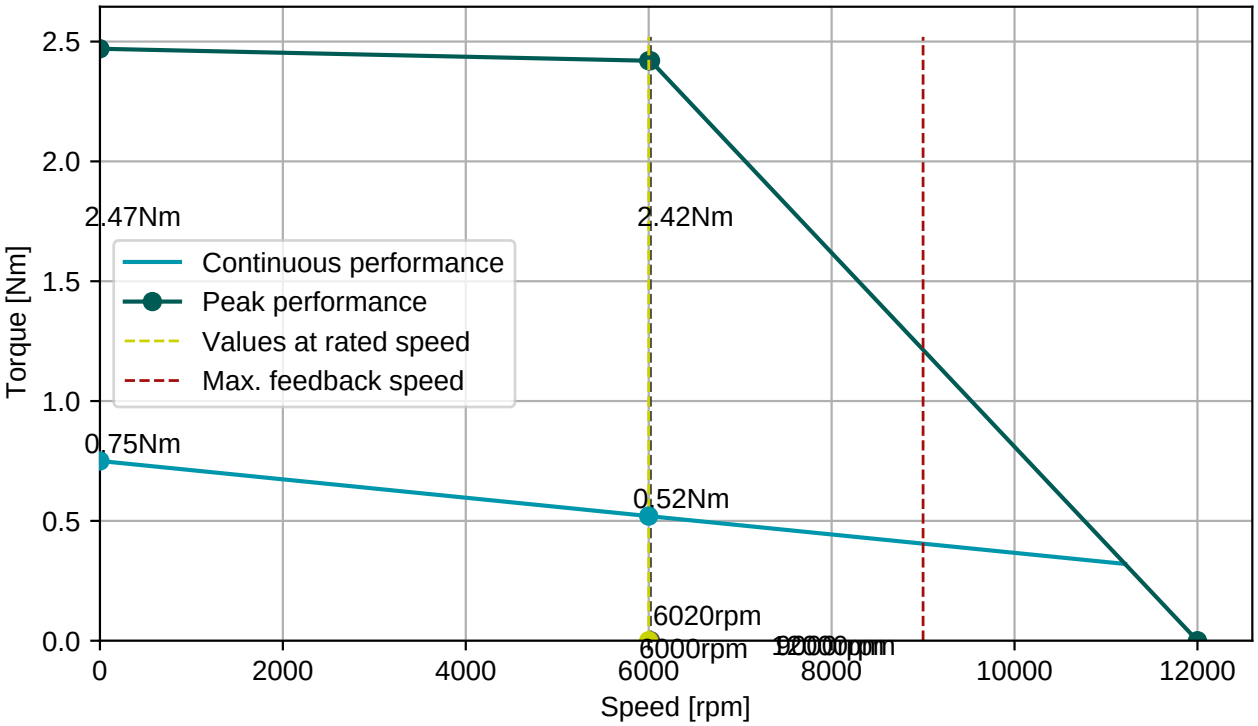

EGA201N00000800000

M15, 9 poles, rotary

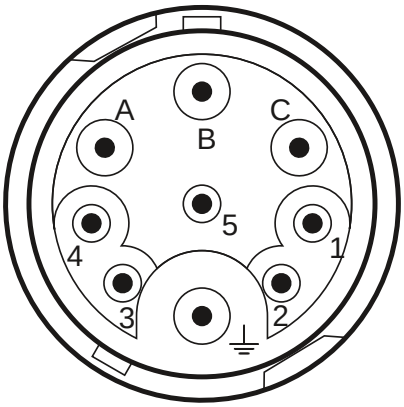

Connector 1 (304)	
A	U
B	V
C	W
PE	PE
1	Brake+
2	Brake-
3	+Us/DSL+
4	GND/DSL-

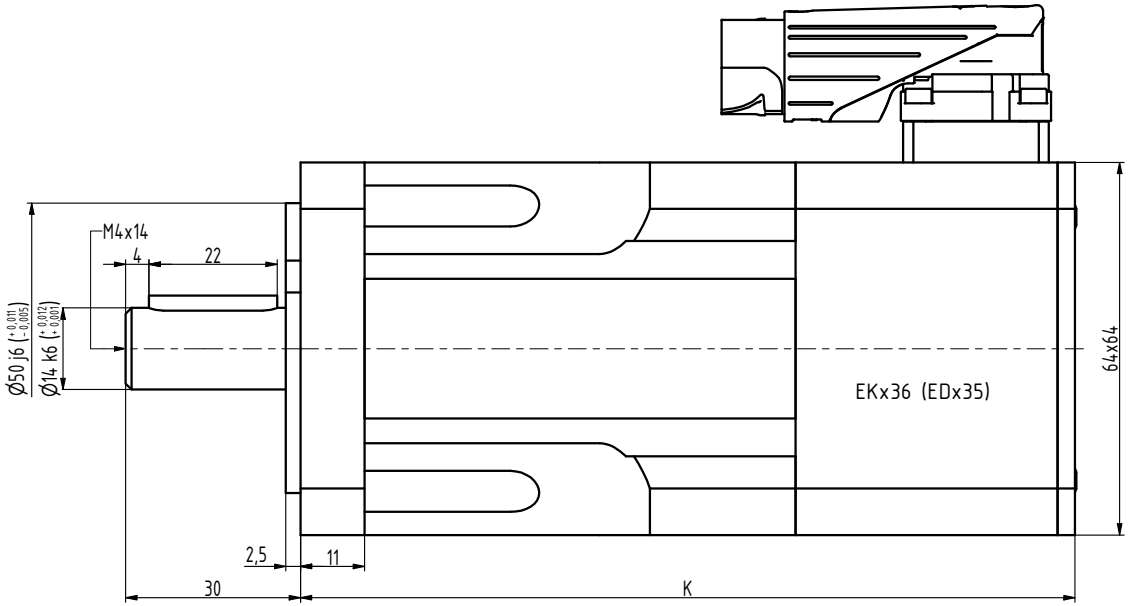

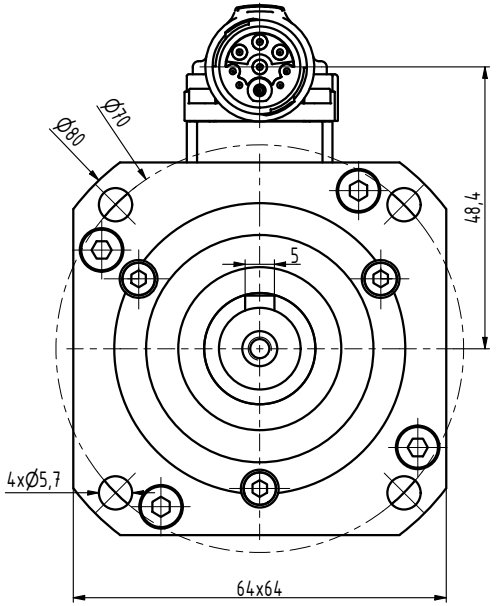

TYP	K
MA-0075	115
MA-0130	133
MA-0175	151
MA-0220	169
MA-0300	205

INDEX	ZMĚNA	DATUM	PODPIS

ZN.MAT.		T.O.	HMOTNOST kg	MĚŘ.
ROZM.-POLOT.				
POM. ZAŘ.			ČSN	TŘ.Č.
VYPR. Šimík	NORM.REF.		POZN.	Č. KUSOVNÍKU
PŘEKR.				
TECHNOL.	SCHVÁLIL Weis	05.08.2019	STARÝ V.	Č.V.

NÁZEV
Motor MA

MA001 02 P Z

Listů List