Engineering data (WIN 1620)		
DC bus voltage	320	V DC
Nominal AC voltage	220	V AC (rms)
Rated voltage	162	V AC (rms)
Rated power	624	W
Rated speed	4000	rpm
Rated torque	1.49	Nm
Rated current	2.68	A (rms)
Peak torque	11.4	Nm
Peak current	18.8	A (rms)
Stall torque	3	Nm
Stall current	4.37	A (rms)
No load speed	5280	rpm
EMF constant ±10%	41.5	V AC (rms) / 1000rpm
Theoretical torque constant ±10%	0.686	Nm / A (rms)
Torque constant ±10% @ rated load	0.556	Nm / A (rms)
Number of poles	10	
Electrical time constant	1.62	ms
Winding terminal resistance	2.479	Ω
Rotary field terminal inductance	4.02	mH

Customs info	
HS Code	85015100

Mechanical data (setting 48)		
Max mechanical speed	12000	rpm
Mech. time constant	1.09	ms
Thermal time constant	40	min
Rotor inertia	1.2	kgcm²
Protection	IP64	
Color	RAL 9005	
Cooling	Convection	
Motor-only mass	3.3	kg
Max. axial force 20kh	68	N
Max. radial force 20kh*	360	N
Max. axial force 100kh	40	N
Max. radial force 100kh*	211	N

** Defined for point of action at ½ output shaft length*

Sensors	
Temperature	PT1000 {PT1000}
Feedback	EKM36 (HDSL) multi-turn, 17 + 12 bits

Brake		
Braking torque	4.50	Nm
Voltage	24	V DC
Power @20°C	12.0	W
Current @20°C	0.50	A
Inertia	0.20	kgcm²
Mass	0.47	kg

Torque / speed curve

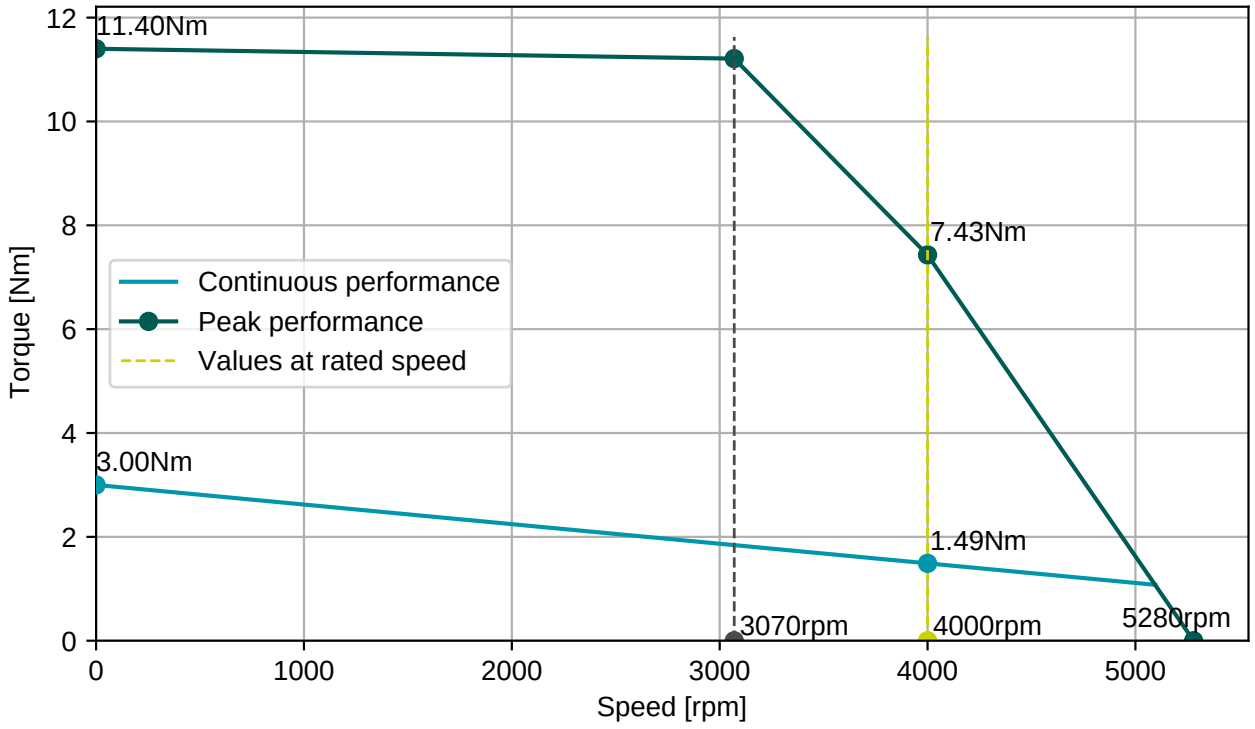

EGA201N00000800000

M15, 9 poles, rotary

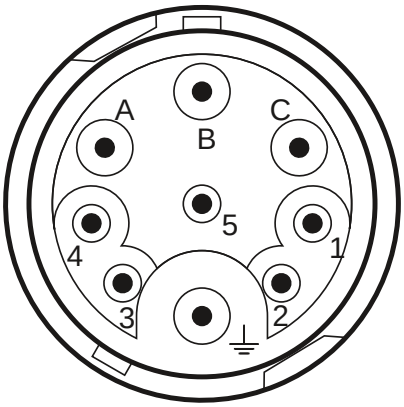

Connector 1 (304)	
A	U
B	V
C	W
PE	PE
1	Brake+
2	Brake-
3	+Us/DSL+
4	GND/DSL-

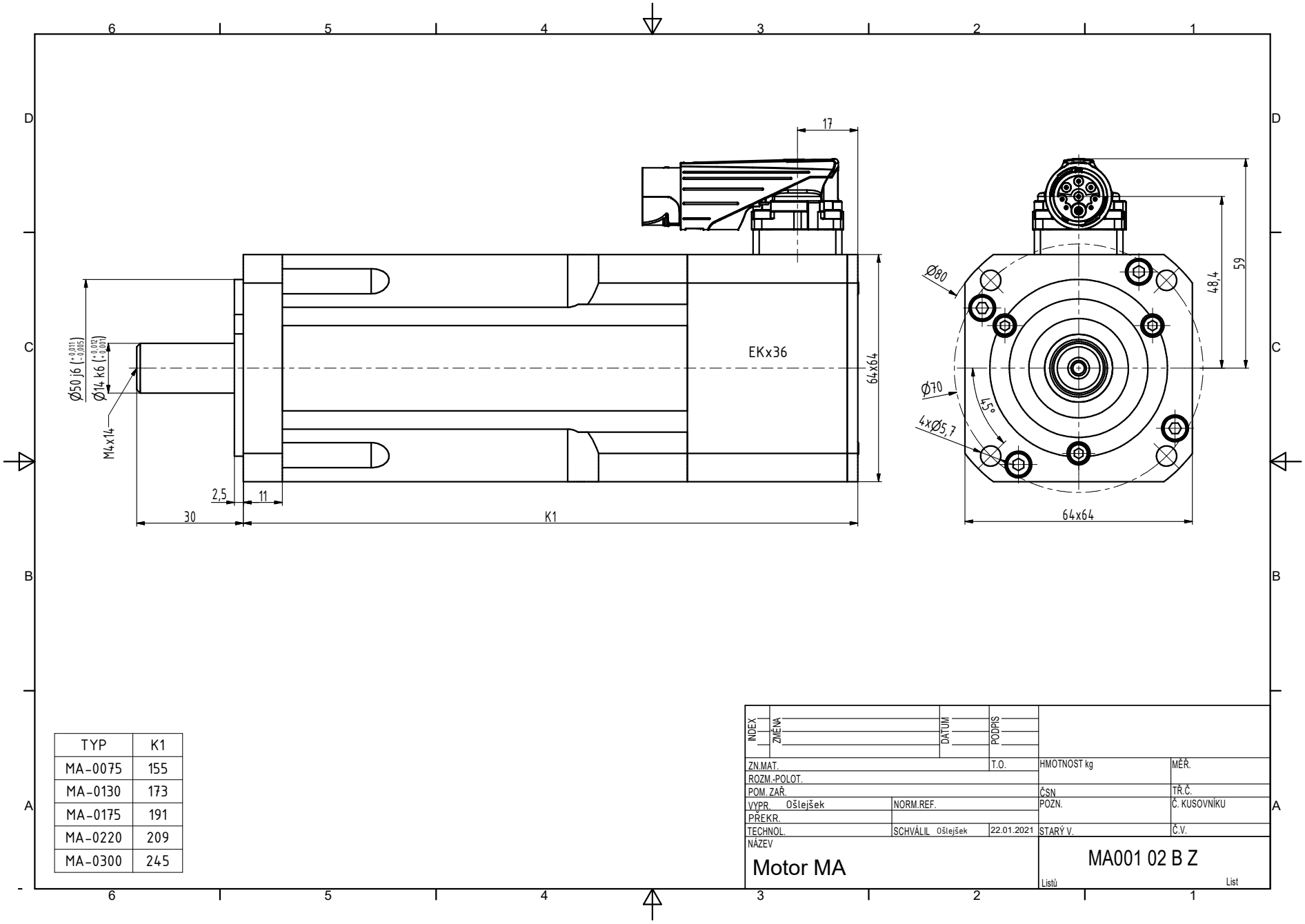

TYP	K1
MA-0075	155
MA-0130	173
MA-0175	191
MA-0220	209
MA-0300	245

INDEX	ZMĚNA	DATUM	PODPIS

ZN.MAT.		T.O.	HMOTNOST kg	MĚŘ.
ROZM.-POLOT.				
POM. ZAŘ.			ČSN	TŘ.Č.
VYPR. Ošlejšek	NORM.REF.		POZN.	Č. KUSOVNÍKU
PŘEKR.				
TECHNOL.	SCHVÁLIL Ošlejšek	22.01.2021	STARÝ V.	Č.V.

NÁZEV

Motor MA

MA001 02 B Z

Listů List