| Engineering data (WIN 1343) | | |
|---|---|---|
| DC bus voltage | 560 | V DC |
| Nominal AC voltage | 380 | V AC (rms) |
| Rated voltage | 199 | V AC (rms) |
| Rated power | 327 | W |
| Rated speed | 6000 | rpm |
| Rated torque | 0.52 | Nm |
| Rated current | 1.19 | A (rms) |
| Peak torque | 2.47 | Nm |
| Peak current | 5.9 | A (rms) |
| Stall torque | 0.75 | Nm |
| Stall current | 1.44 | A (rms) |
| No load speed | 12000 | rpm |
| EMF constant ±10% | 31.5 | V AC (rms) / 1000rpm |
| Theoretical torque constant ±10% | 0.521 | Nm / A (rms) |
| Torque constant ±10% @ rated load | 0.437 | Nm / A (rms) |
| Number of poles | 10 | |
| Electrical time constant | 1.13 | ms |
| Winding terminal resistance | 12.438 | Ω |
| Rotary field terminal inductance | 14.1 | mH |

| Customs info | |
|---|---|
| HS Code | 85015100 |

| Mechanical data (setting 48) | | |
|---|---|---|
| Max mechanical speed | 12000 | rpm |
| Mech. time constant | 2.62 | ms |
| Thermal time constant | 20 | min |
| Rotor inertia | 0.33 | kgcm² |
| Protection | IP64 | |
| Color | RAL 9005 | |
| Cooling | Convection | |
| Motor-only mass | 1.3 | kg |
| Max. axial force 20kh | 37 | N |
| Max. radial force 20kh* | 195 | N |
| Max. axial force 100kh | 22 | N |
| Max. radial force 100kh* | 114 | N |

** Defined for point of action at ½ output shaft length*

| Sensors | |
|---|---|
| Temperature | PT1000 {PT1000} |
| Feedback | EKS36 (HDSL) single-turn, 18 bits, SIL2 |

Torque / speed curve

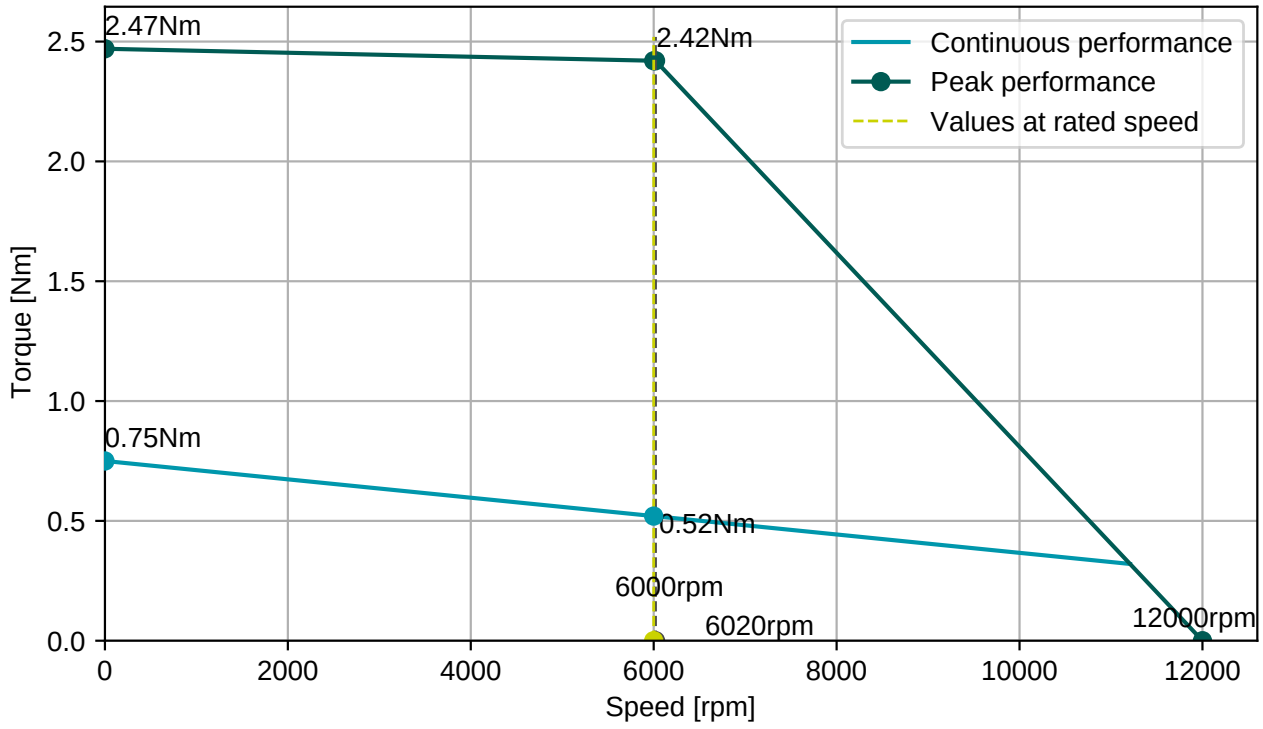


**EGA201N00000800000**

M15, 9 poles, rotary

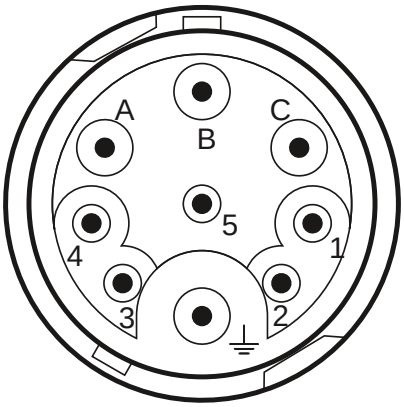


| Connector 1 (304) | |
|---|---|
| **A** | U |
| **B** | V |
| **C** | W |
| **PE** | PE |
| **1** | Brake+ |
| **2** | Brake- |
| **3** | +Us/DSL+ |
| **4** | GND/DSL- |

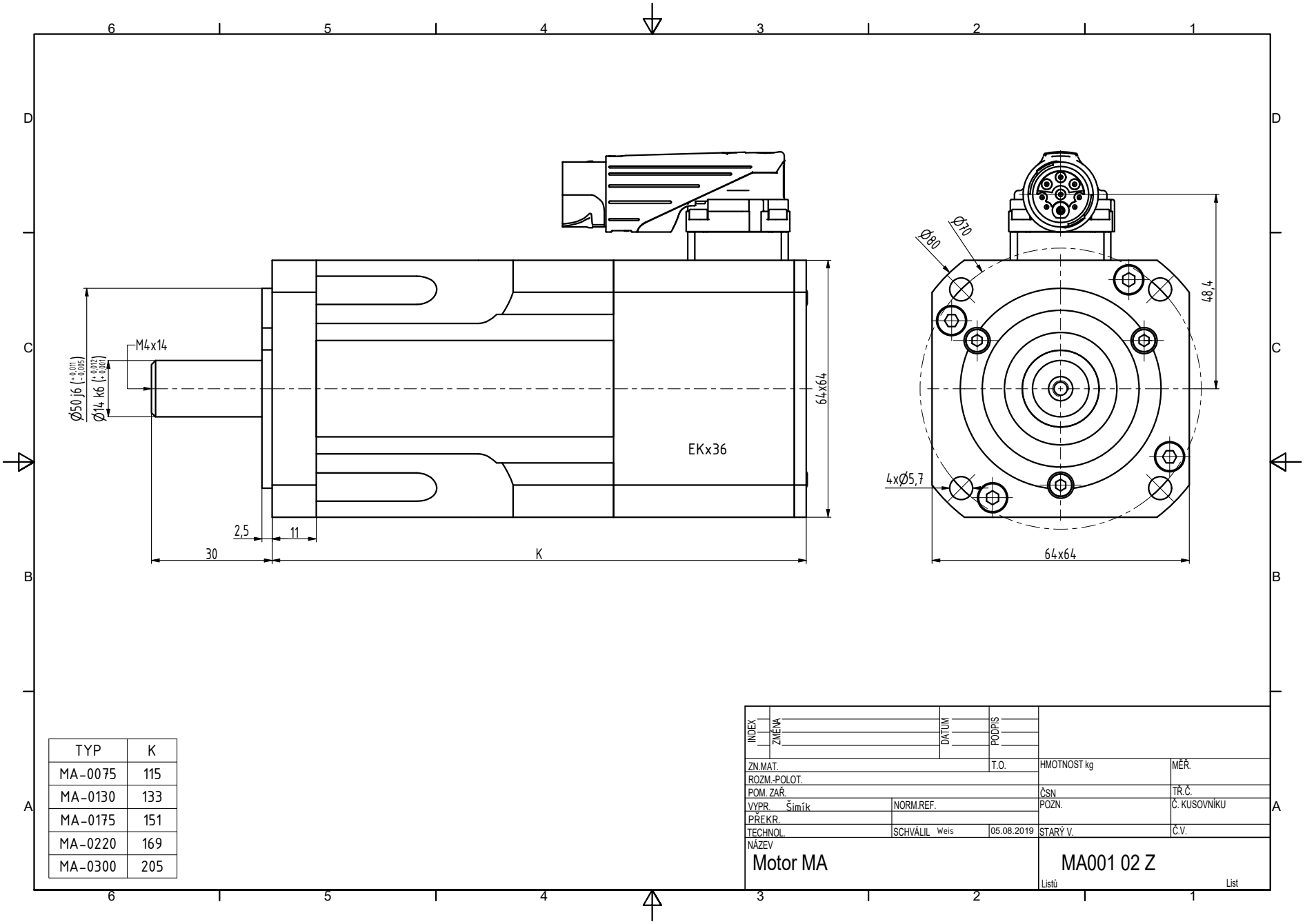


| TYP | K |
|---|---|
| MA-0075 | 115 |
| MA-0130 | 133 |
| MA-0175 | 151 |
| MA-0220 | 169 |
| MA-0300 | 205 |

| INDEX | ZMĚNA | DATUM | PODPIS |
|---|---|---|---|
| | | | |

| | | | | | |
|---|---|---|---|---|---|
| ZN.MAT. | | T.O. | HMOTNOST kg | MĚŘ. | |
| ROZM.-POLOT. | | | | | |
| POM. ZAŘ. | | | ČSN | TŘ.Č. | |
| VYPR. Šimík | NORM.REF. | | POZN. | Č. KUSOVNÍKU | |
| PŘEKR. | | | | | |
| TECHNOL. | SCHVÁLIL Weis | 05.08.2019 | STARÝ V. | Č.V. | |

NÁZEV
Motor MA

MA001 02 Z

Listů List