| Engineering data (WIN 1579) | | |
|---|---|---|
| DC bus voltage | 320 | V DC |
| Nominal AC voltage | 220 | V AC (rms) |
| Rated voltage | 177 | V AC (rms) |
| Rated power | 471 | W |
| Rated speed | 6000 | rpm |
| Rated torque | 0.75 | Nm |
| Rated current | 1.9 | A (rms) |
| Peak torque | 8.36 | Nm |
| Peak current | 18.8 | A (rms) |
| Stall torque | 2.2 | Nm |
| Stall current | 4.29 | A (rms) |
| No load speed | 7070 | rpm |
| EMF constant ±10% | 31 | V AC (rms) / 1000rpm |
| Theoretical torque constant ±10% | 0.513 | Nm / A (rms) |
| Torque constant ±10% @ rated load | 0.395 | Nm / A (rms) |
| Number of poles | 10 | |
| Electrical time constant | 1.58 | ms |
| Winding terminal resistance | 2.151 | Ω |
| Rotary field terminal inductance | 3.39 | mH |

| Customs info | |
|---|---|
| HS Code | 85015100 |

| Mechanical data (setting 48) | | |
|---|---|---|
| Max mechanical speed | 12000 | rpm |
| Mech. time constant | 1.20 | ms |
| Thermal time constant | 32 | min |
| Rotor inertia | 0.85 | kgcm² |
| Protection | IP64 | |
| Color | RAL 9005 | |
| Cooling | Convection | |
| Motor-only mass | 2.7 | kg |
| Max. axial force 20kh | 51 | N |
| Max. radial force 20kh* | 266 | N |
| Max. axial force 100kh | 30 | N |
| Max. radial force 100kh* | 156 | N |

** Defined for point of action at ½ output shaft length*

| Sensors | |
|---|---|
| Temperature | PT1000 {PT1000} |
| Feedback | EKS36 (HDSL) single-turn, 17 bits |

| Brake | | |
|---|---|---|
| Braking torque | 4.50 | Nm |
| Voltage | 24 | V DC |
| Power @20°C | 12.0 | W |
| Current @20°C | 0.50 | A |
| Inertia | 0.20 | kgcm² |
| Mass | 0.47 | kg |

Torque / speed curve

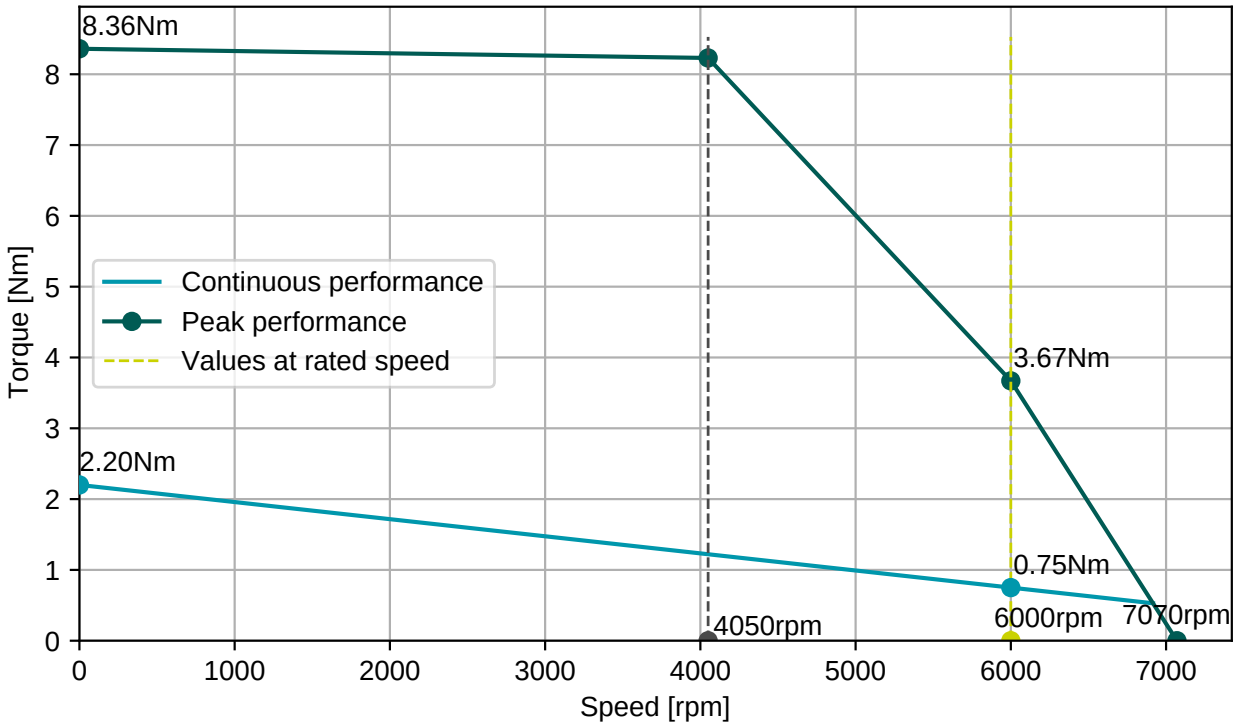


**BGC110N00001216000**

M23, 8 poles, rotary

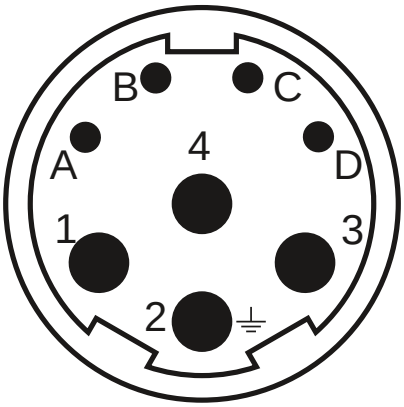


| Connector 1 (283) | |
|---|---|
| **1** | U |
| **4** | V |
| **3** | W |
| **2** | PE |
| **A** | Brake+ |
| **B** | Brake- |
| **C** | GND/DSL- |
| **D** | +Us/DSL+ |

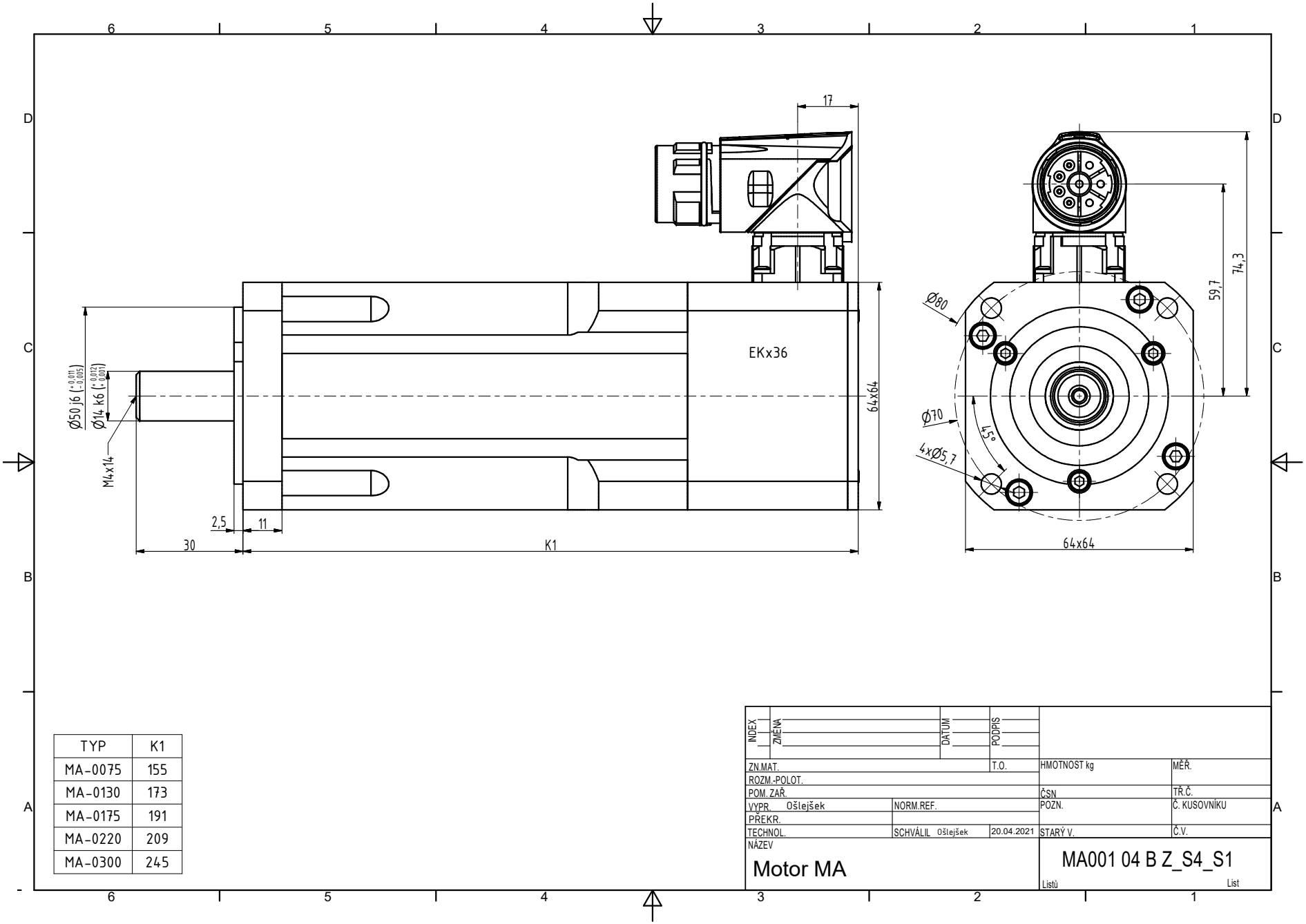


| TYP | K1 |
|---|---|
| MA-0075 | 155 |
| MA-0130 | 173 |
| MA-0175 | 191 |
| MA-0220 | 209 |
| MA-0300 | 245 |

| INDEX | ZMĚNA | DATUM | PODPIS |
|---|---|---|---|
| | | | |

| | | | | | |
|---|---|---|---|---|---|
| ZN.MAT. | | T.O. | HMOTNOST kg | MĚŘ. | |
| ROZM.-POLOT. | | | | | |
| POM. ZAŘ. | | | ČSN | TŘ.Č. | |
| VYPR. Ošlejšek | NORM.REF. | | POZN. | Č. KUSOVNÍKU | |
| PŘEKR. | | | | | |
| TECHNOL. | SCHVÁLIL Ošlejšek | 20.04.2021 | STARÝ V. | Č.V. | |

NÁZEV

Motor MA

MA001 04 B Z_S4_S1

Listů List