Engineering data (WIN 1439)		
DC bus voltage	320	V DC
Nominal AC voltage	220	V AC (rms)
Rated voltage	165	V AC (rms)
Rated power	490	W
Rated speed	6000	rpm
Rated torque	0.78	Nm
Rated current	2.06	A (rms)
Peak torque	4.94	Nm
Peak current	13.5	A (rms)
Stall torque	1.3	Nm
Stall current	2.86	A (rms)
No load speed	7970	rpm
EMF constant ±10%	27.5	V AC (rms) / 1000rpm
Theoretical torque constant ±10%	0.455	Nm / A (rms)
Torque constant ±10% @ rated load	0.379	Nm / A (rms)
Number of poles	10	
Electrical time constant	1.34	ms
Winding terminal resistance	3.99	Ω
Rotary field terminal inductance	5.35	mH

Customs info	
HS Code	85015100

Mechanical data (setting 48)		
Max mechanical speed	12000	rpm
Mech. time constant	1.67	ms
Thermal time constant	24	min
Rotor inertia	0.5	kgcm²
Protection	IP64	
Color	RAL 9005	
Cooling	Convection	
Motor-only mass	1.6	kg
Max. axial force 20kh	45	N
Max. radial force 20kh*	237	N
Max. axial force 100kh	26	N
Max. radial force 100kh*	139	N

** Defined for point of action at ½ output shaft length*

Sensors	
Temperature	PT1000 {PT1000}
Feedback	EKS36 (HDSL) single-turn, 17 bits

Brake		
Braking torque	4.50	Nm
Voltage	24	V DC
Power @20°C	12.0	W
Current @20°C	0.50	A
Inertia	0.20	kgcm²
Mass	0.47	kg

Torque / speed curve

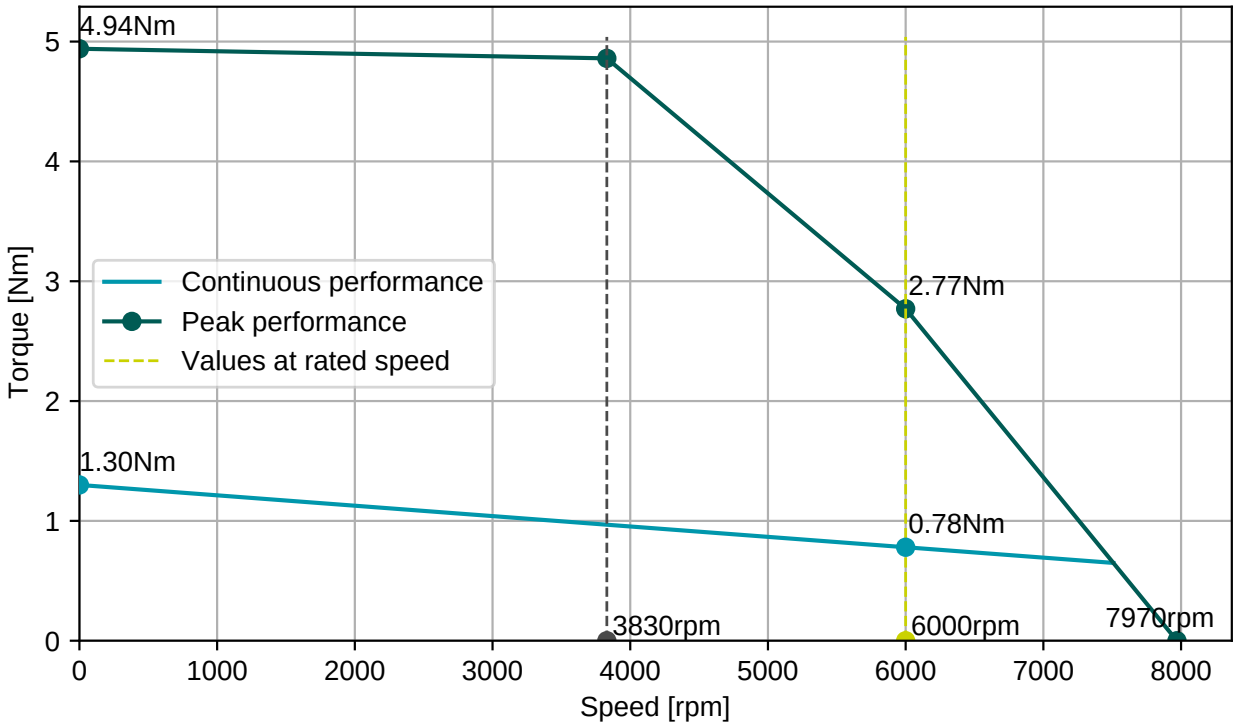

BGC110N00001216000

M23, 8 poles, rotary

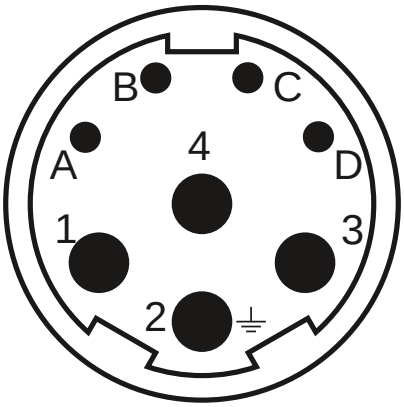

Connector 1 (283)	
1	U
4	V
3	W
2	PE
A	Brake+
B	Brake-
C	GND/DSL-
D	+Us/DSL+

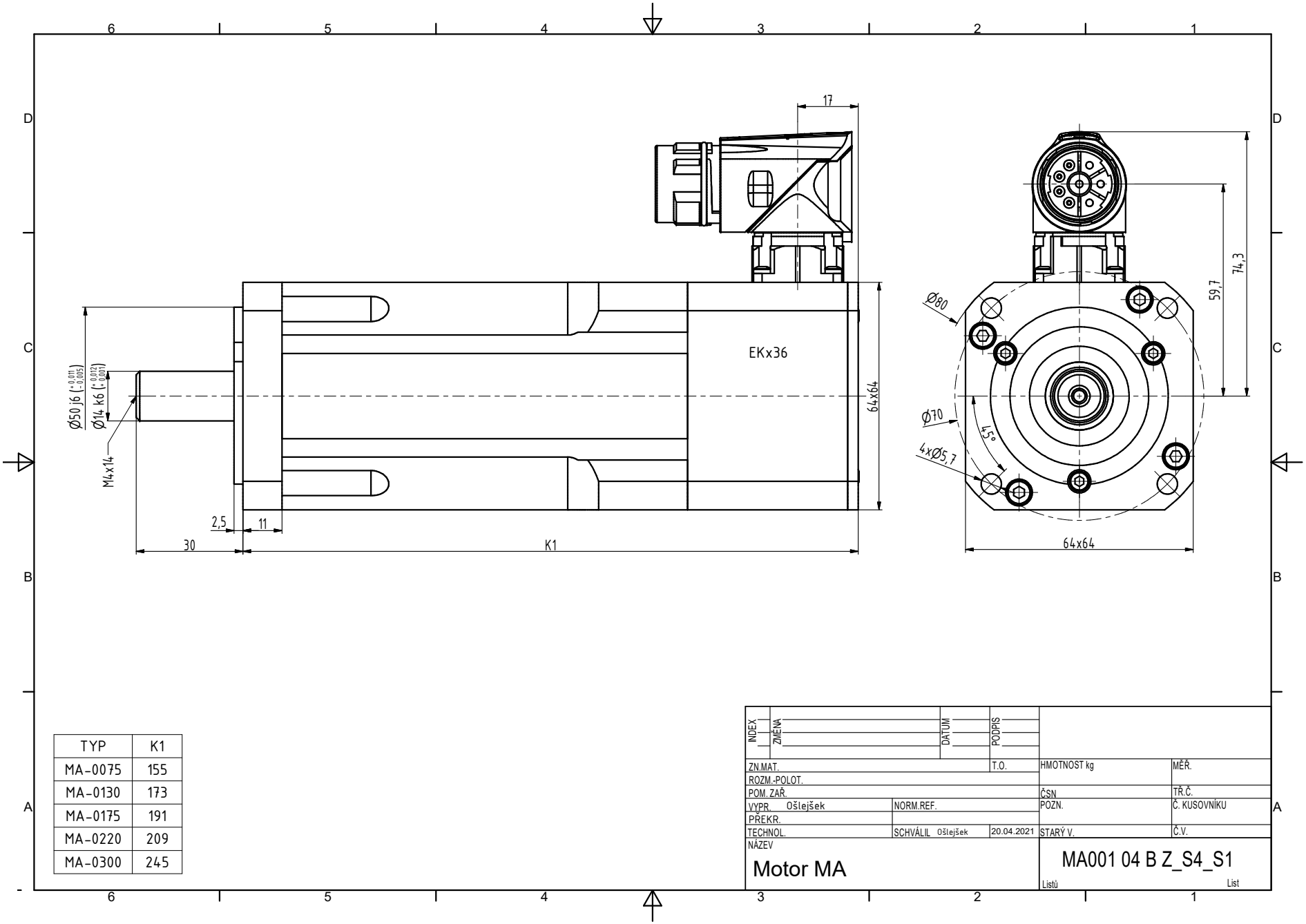

TYP	K1
MA-0075	155
MA-0130	173
MA-0175	191
MA-0220	209
MA-0300	245

INDEX	ZMĚNA	DATUM	PODPIS

ZN.MAT.		T.O.	HMOTNOST kg	MĚŘ.
ROZM.-POLOT.				
POM. ZAŘ.			ČSN	TŘ.Č.
VYPR. Ošlejšek	NORM.REF.		POZN.	Č. KUSOVNÍKU
PŘEKR.				
TECHNOL.	SCHVÁLIL Ošlejšek	20.04.2021	STARÝ V.	Č.V.

NÁZEV

Motor MA

MA001 04 B Z_S4_S1

Listů List