Engineering data (WIN 1600)		
DC bus voltage	560	V DC
Nominal AC voltage	380	V AC (rms)
Rated voltage	280	V AC (rms)
Rated power	580	W
Rated speed	4500	rpm
Rated torque	1.23	Nm
Rated current	1.43	A (rms)
Peak torque	8.36	Nm
Peak current	9.2	A (rms)
Stall torque	2.2	Nm
Stall current	2.11	A (rms)
No load speed	6010	rpm
EMF constant ±10%	63	V AC (rms) / 1000rpm
Theoretical torque constant ±10%	1.042	Nm / A (rms)
Torque constant ±10% @ rated load	0.860	Nm / A (rms)
Number of poles	10	
Electrical time constant	1.58	ms
Winding terminal resistance	8.941	Ω
Rotary field terminal inductance	14.1	mH

Customs info	
HS Code	85015100

Mechanical data (setting 48)		
Max mechanical speed	12000	rpm
Mech. time constant	1.21	ms
Thermal time constant	32	min
Rotor inertia	0.85	kgcm²
Protection	IP64	
Color	RAL 9005	
Cooling	Convection	
Motor-only mass	2.2	kg
Max. axial force 20kh	54	N
Max. radial force 20kh	286	N*
Max. axial force 100kh	32	N
Max. radial force 100kh	167	N*

** Defined for point of action at ½ output shaft length*

Sensors	
Temperature	PT1000 {PT1000}
Feedback	EKM36 (HDSL) multi-turn, 18+12 bits, SIL2

Torque / speed curve

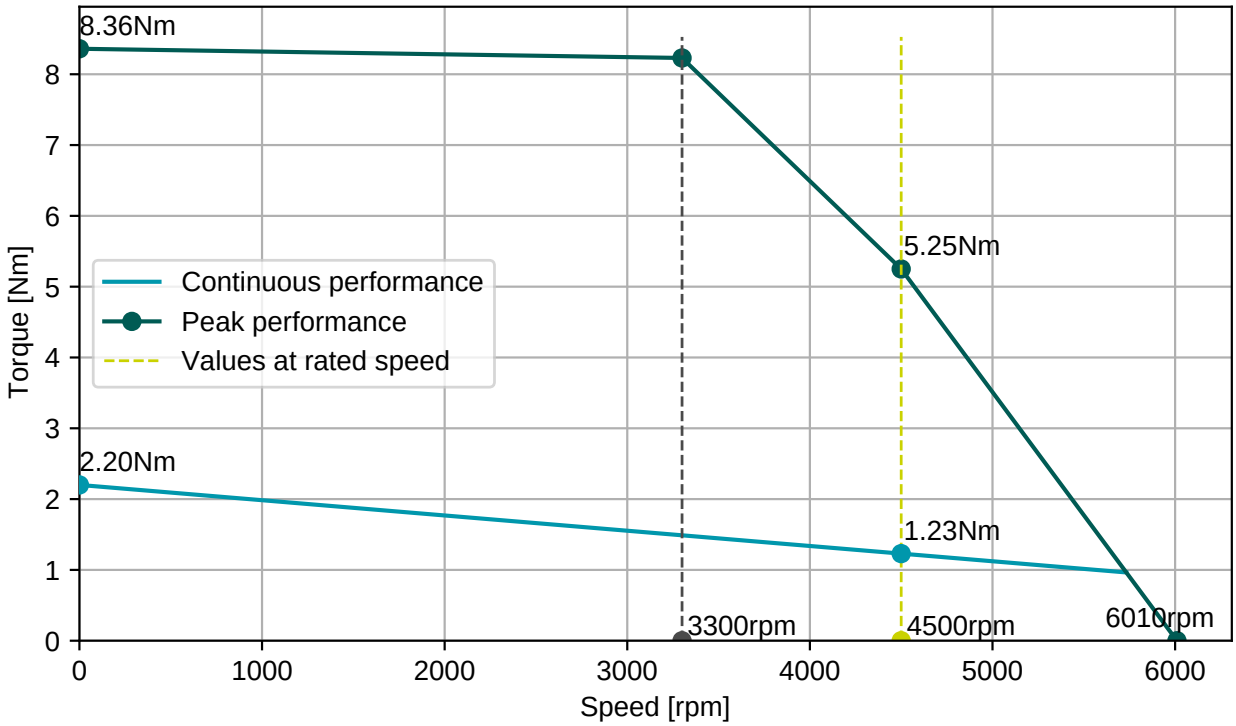

BGC110N00001216000

M23, 8 poles, rotary

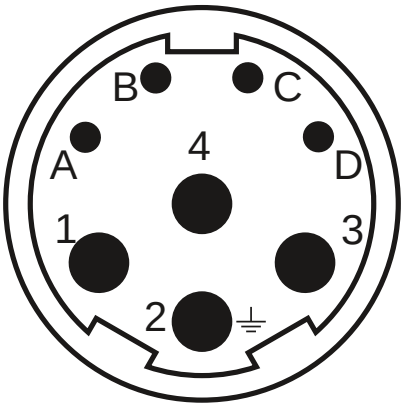

Connector 1 (283)	
1	U
4	V
3	W
2	PE
A	Brake+
B	Brake-
C	GND/DSL-
D	+Us/DSL+

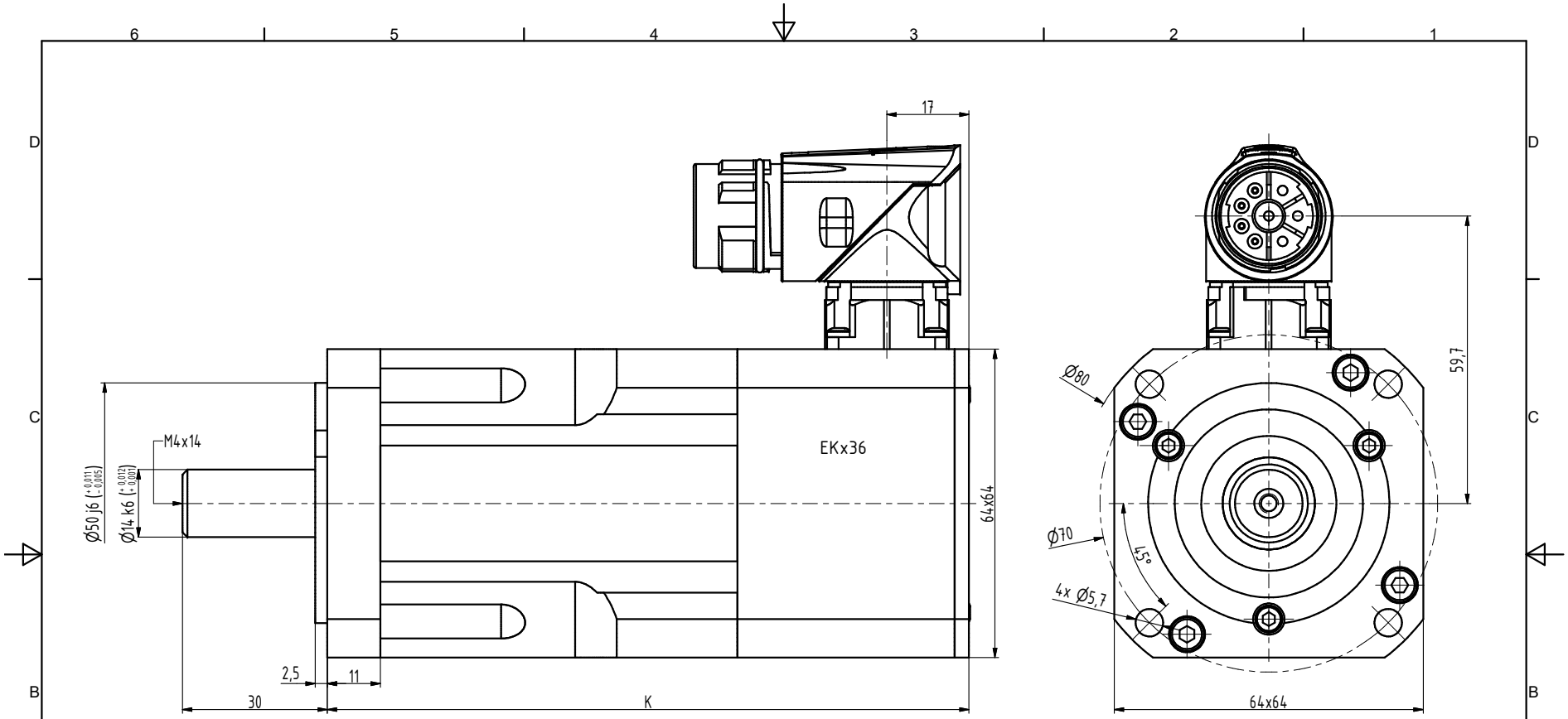

TYP	K
MA-0075	115
MA-0130	133
MA-0175	151
MA-0220	169
MA-0300	205

INDEX	ZMĚNA	DATUM	PODPIS

ZN.MAT.		T.O.	HMOTNOST kg
ROZM.-POLOT.			
POM. ZAŘ.			ČSN
VYPR. Ošlejšek	NORM.REF.		POZN.
PŘEKR.			
TECHNOL.	SCHVÁLIL Ošlejšek	13.11.2020	STARÝ V.

MĚŘ. | TŘ.Č. | Č. KUSOVNÍKU | Č.V.

NÁZEV
Motor MA

MA001 04 Z

Listů | List