Engineering data (WIN 1621)		
DC bus voltage	320	V DC
Nominal AC voltage	220	V AC (rms)
Rated voltage	167	V AC (rms)
Rated power	539	W
Rated speed	5000	rpm
Rated torque	1.03	Nm
Rated current	2.24	A (rms)
Peak torque	6.65	Nm
Peak current	14	A (rms)
Stall torque	1.75	Nm
Stall current	3.16	A (rms)
No load speed	6540	rpm
EMF constant ±10%	33.5	V AC (rms) / 1000rpm
Theoretical torque constant ±10%	0.554	Nm / A (rms)
Torque constant ±10% @ rated load	0.460	Nm / A (rms)
Number of poles	10	
Electrical time constant	1.43	ms
Winding terminal resistance	3.607	Ω
Rotary field terminal inductance	5.17	mH

Customs info	
HS Code	85015100

Mechanical data (setting 48)		
Max mechanical speed	12000	rpm
Mech. time constant	1.38	ms
Thermal time constant	28	min
Rotor inertia	0.68	kgcm²
Protection	IP64	
Color	RAL 9005	
Cooling	Convection	
Motor-only mass	1.9	kg
Max. axial force 20kh	52	N
Max. radial force 20kh*	276	N
Max. axial force 100kh	31	N
Max. radial force 100kh*	161	N

** Defined for point of action at ½ output shaft length*

Sensors	
Temperature	PT1000 {PT1000}
Feedback	EKS36 (HDSL) single-turn, 18 bits, SIL2

Torque / speed curve

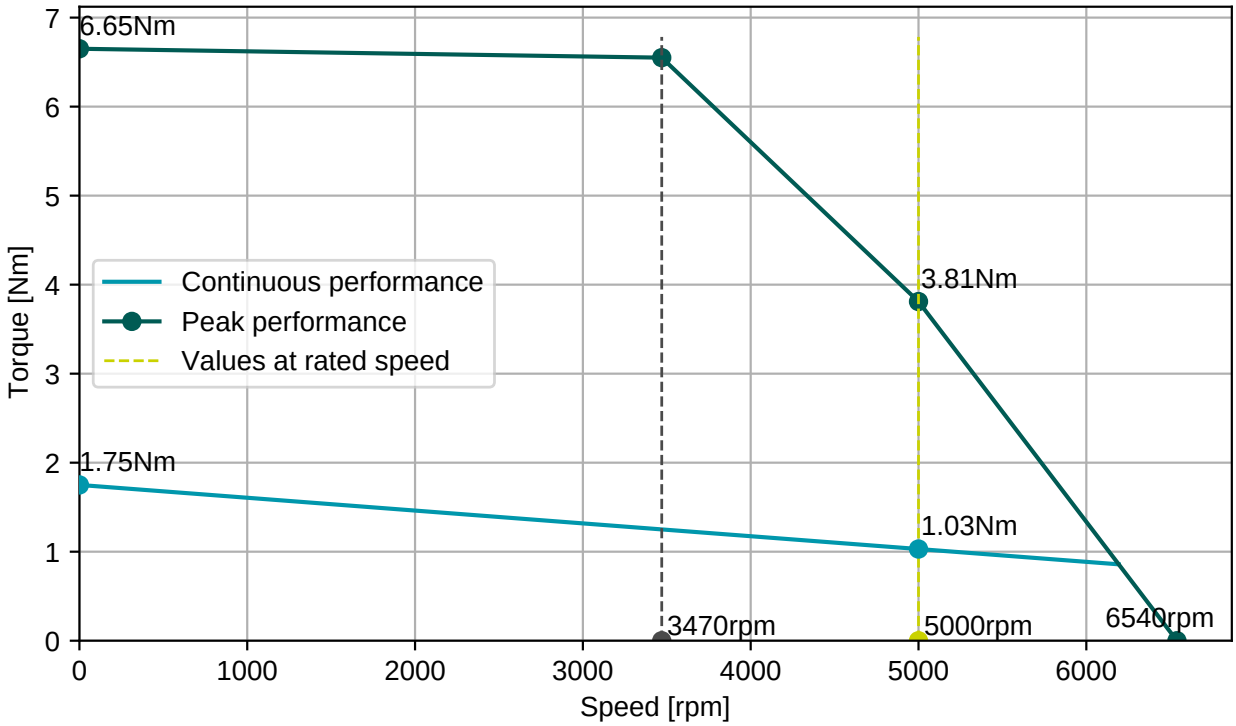

BGC110N00001216000

M23, 8 poles, rotary

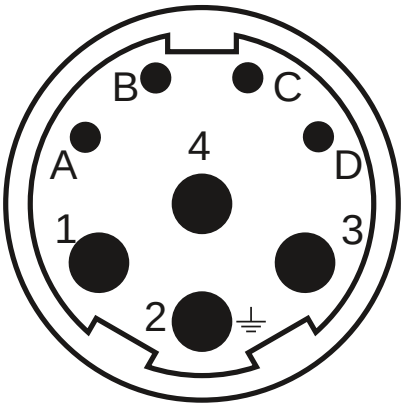

Connector 1 (283)	
1	U
4	V
3	W
2	PE
A	Brake+
B	Brake-
C	GND/DSL-
D	+Us/DSL+

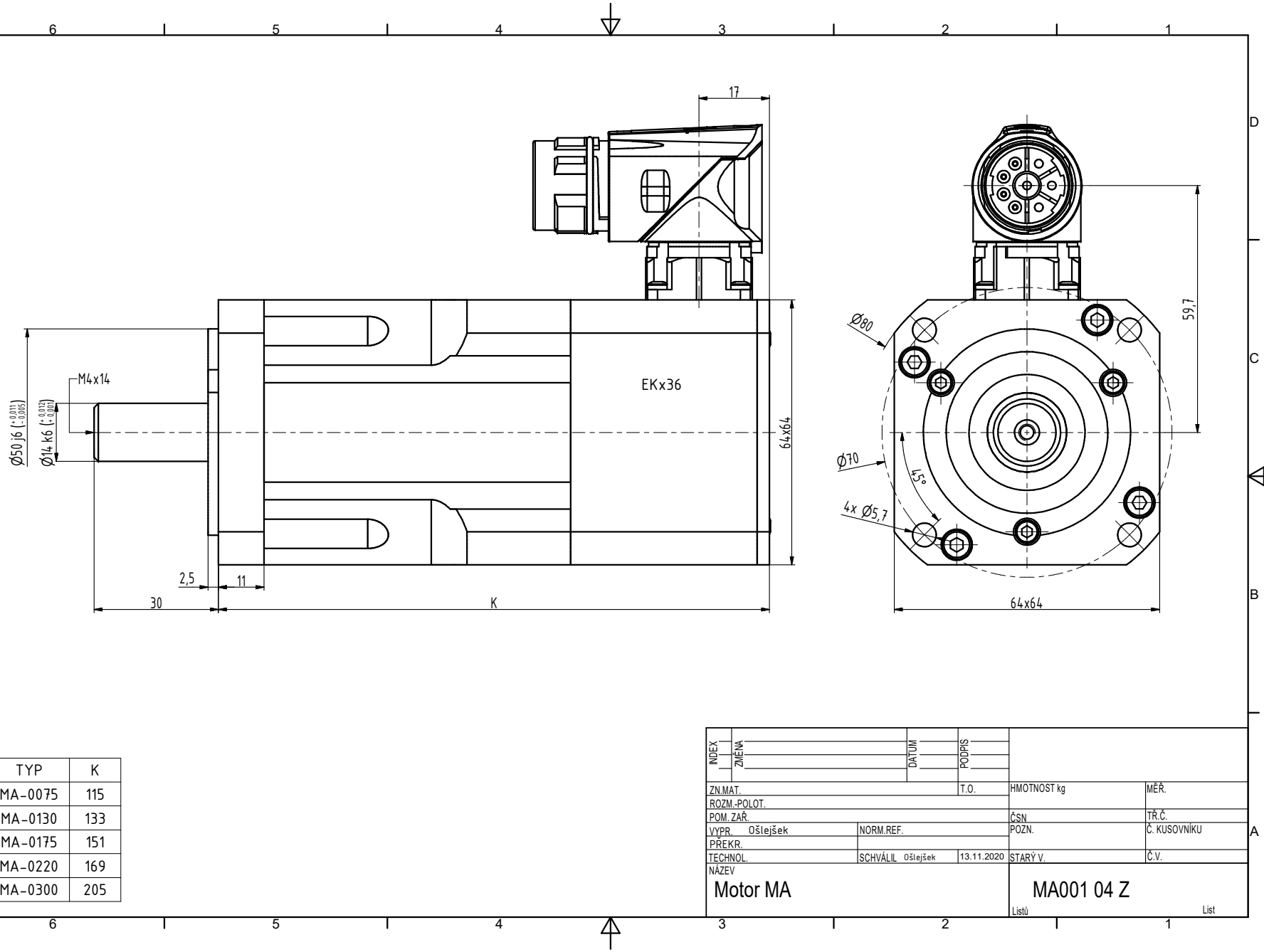

TYP	K
MA-0075	115
MA-0130	133
MA-0175	151
MA-0220	169
MA-0300	205

INDEX	ZMĚNA	DATUM	PODPIS

ZN.MAT.		T.O.	HMOTNOST kg	MĚŘ.	
ROZM.-POLOT.					
POM. ZAŘ.			ČSN	TŘ.Č.	
VYPR. Ošlejšek	NORM.REF.		POZN.	Č. KUSOVNÍKU	
PŘEKR.					
TECHNOL.	SCHVÁLIL Ošlejšek	13.11.2020	STARÝ V.	Č.V.	

NÁZEV

Motor MA

MA001 04 Z

Listů List