Engineering data (WIN 1154)		
DC bus voltage	560	V DC
Nominal AC voltage	380	V AC (rms)
Rated voltage	269	V AC (rms)
Rated power	8.5	kW
Rated speed	2000	rpm
Rated torque	40.40	Nm
Rated current	21.82	A (rms)
Peak torque	150	Nm
Peak current	78.9	A (rms)
Stall torque	50	Nm
Stall current	22.7	A (rms)
No load speed	2850	rpm
EMF constant ±10%	133	V AC (rms) / 1000rpm
Theoretical torque constant ±10%	2.2	Nm / A (rms)
Torque constant ±10% @ rated load	1.9	Nm / A (rms)
Number of poles	10	
Electrical time constant	19.60	ms
Winding terminal resistance	0.25	Ω
Rotary field terminal inductance	4.9	mH

Customs info	
HS Code	85015230

Mechanical data (setting 48)		
Max mechanical speed	6000	rpm
Mech. time constant	0.79	ms
Thermal time constant	100	min
Rotor inertia	88	kgcm²
Protection	IP64	
Color	RAL 9005	
Cooling	Convection	
Motor-only mass	23.2	kg
Max. axial force 20kh	308	N
Max. radial force 20kh*	1622	N
Max. axial force 100kh	180	N
Max. radial force 100kh*	949	N

** Defined for point of action at ½ output shaft length*

Sensors	
Temperature	PT1000 {PT1000}
Feedback	EDS35 (HDSL) single-turn, 24 bits

Brake		
Braking torque	36.00	Nm
Voltage	24	V DC
Power @20°C	26.0	W
Current @20°C	1.08	A
Inertia	6.20	kgcm²
Mass	2.85	kg

Torque / speed curve

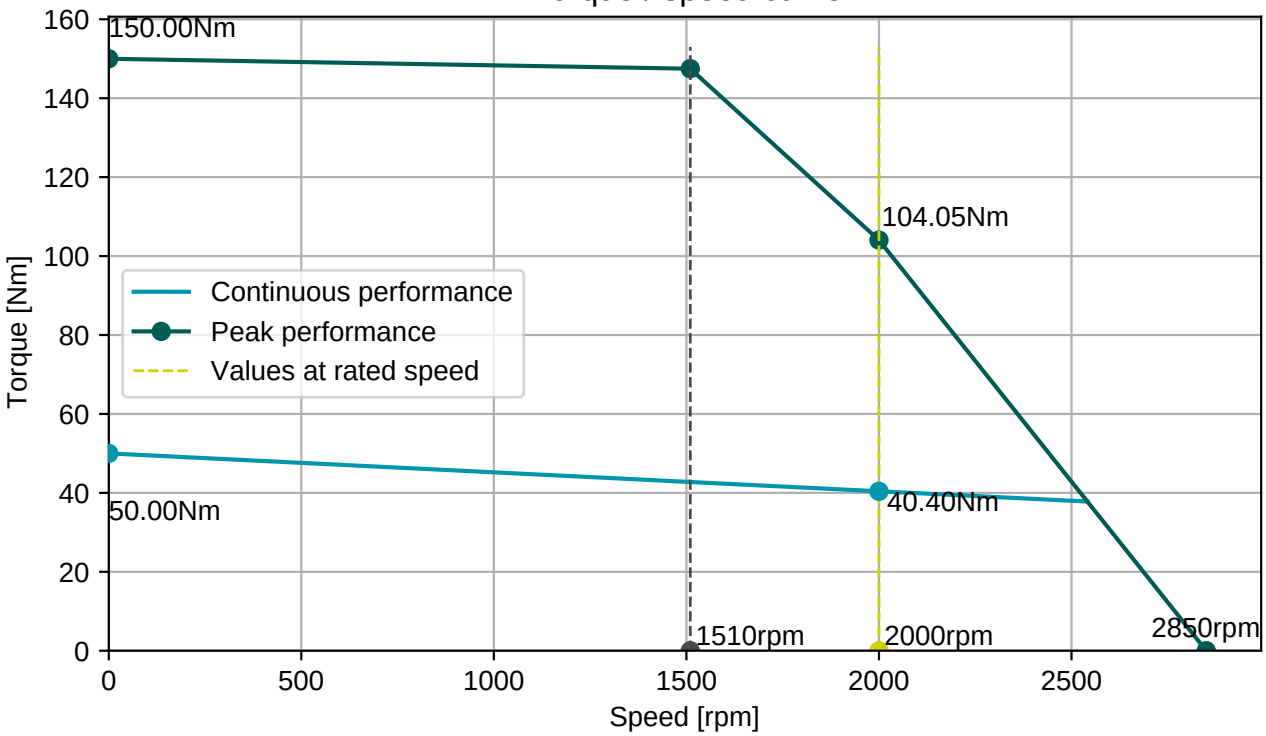

BGC110N00001216000

M23, 8 poles, rotary

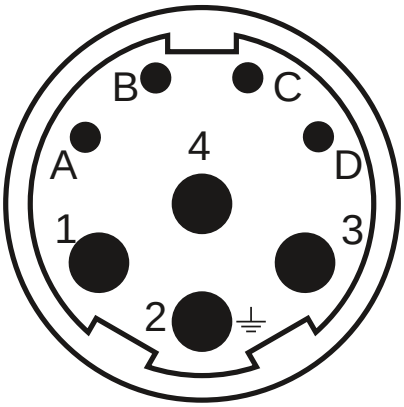

Connector 1 (283)	
1	U
4	V
3	W
2	PE
A	Brake+
B	Brake-
C	GND/DSL-
D	+Us/DSL+

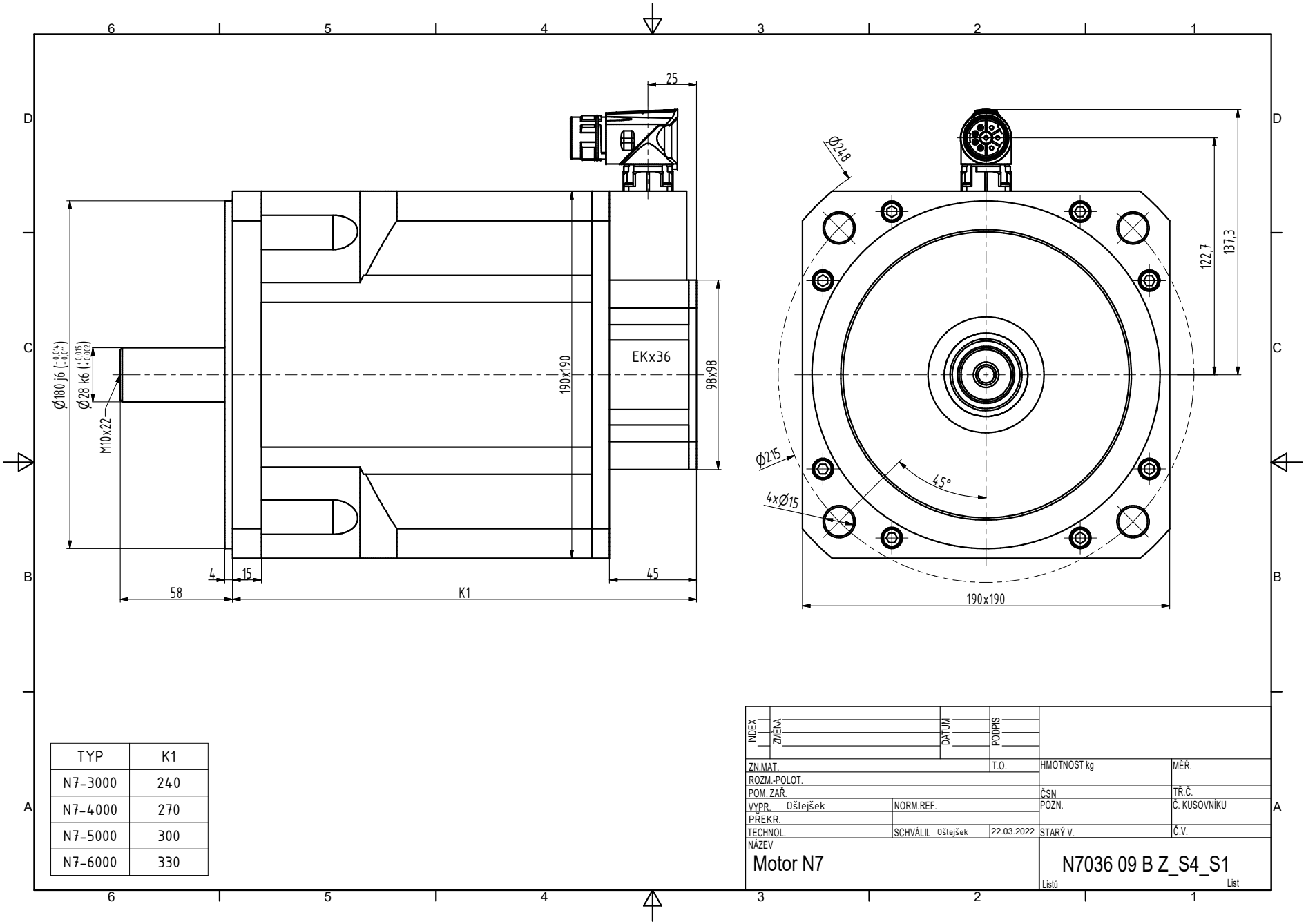

TYP	K1
N7-3000	240
N7-4000	270
N7-5000	300
N7-6000	330

INDEX	ZMĚNA	DATUM	PODPIS

ZN.MAT.		T.O.	HMOTNOST kg	MĚŘ.
ROZM.-POLOT.				
POM. ZAŘ.			ČSN	TŘ.Č.
VYPR. Ošlejšek	NORM.REF.		POZN.	Č. KUSOVNÍKU
PŘEKR.				
TECHNOL.	SCHVÁLIL Ošlejšek	22.03.2022	STARÝ V.	Č.V.

NÁZEV
Motor N7

N7036 09 B Z_S4_S1

Listů List