| Engineering data (WIN 879) | | |
|---|---|---|
| DC bus voltage | 560 | V DC |
| Nominal AC voltage | 380 | V AC (rms) |
| Rated voltage | 311 | V AC (rms) |
| Rated power | 6.9 | kW |
| Rated speed | 2000 | rpm |
| Rated torque | 32.80 | Nm |
| Rated current | 15.38 | A (rms) |
| Peak torque | 120 | Nm |
| Peak current | 59.1 | A (rms) |
| Stall torque | 40 | Nm |
| Stall current | 16.7 | A (rms) |
| No load speed | 2620 | rpm |
| EMF constant ±10% | 145 | V AC (rms) / 1000rpm |
| Theoretical torque constant ±10% | 2.4 | Nm / A (rms) |
| Torque constant ±10% @ rated load | 2.1 | Nm / A (rms) |
| Number of poles | 10 | |
| Electrical time constant | 18.14 | ms |
| Winding terminal resistance | 0.43 | Ω |
| Rotary field terminal inductance | 7.8 | mH |

| Customs info | |
|---|---|
| HS Code | 85015220 |

| Mechanical data (setting 48) | | |
|---|---|---|
| Max mechanical speed | 6000 | rpm |
| Mech. time constant | 0.89 | ms |
| Thermal time constant | 90 | min |
| Rotor inertia | 69 | kgcm² |
| Protection | IP64 | |
| Color | RAL 9005 | |
| Cooling | Convection | |
| Motor-only mass | 23.2 | kg |
| Max. axial force 20kh | 301 | N |
| Max. radial force 20kh* | 1585 | N |
| Max. axial force 100kh | 176 | N |
| Max. radial force 100kh* | 927 | N |

** Defined for point of action at ½ output shaft length*

| Sensors | |
|---|---|
| Temperature | PT1000 {PT1000} |
| Feedback | EKM36 (HDSL) multi-turn, 18+12 bits, SIL2 |

| Brake | | |
|---|---|---|
| Braking torque | 36.00 | Nm |
| Voltage | 24 | V DC |
| Power @20°C | 26.0 | W |
| Current @20°C | 1.08 | A |
| Inertia | 6.20 | kgcm² |
| Mass | 2.85 | kg |

Torque / speed curve

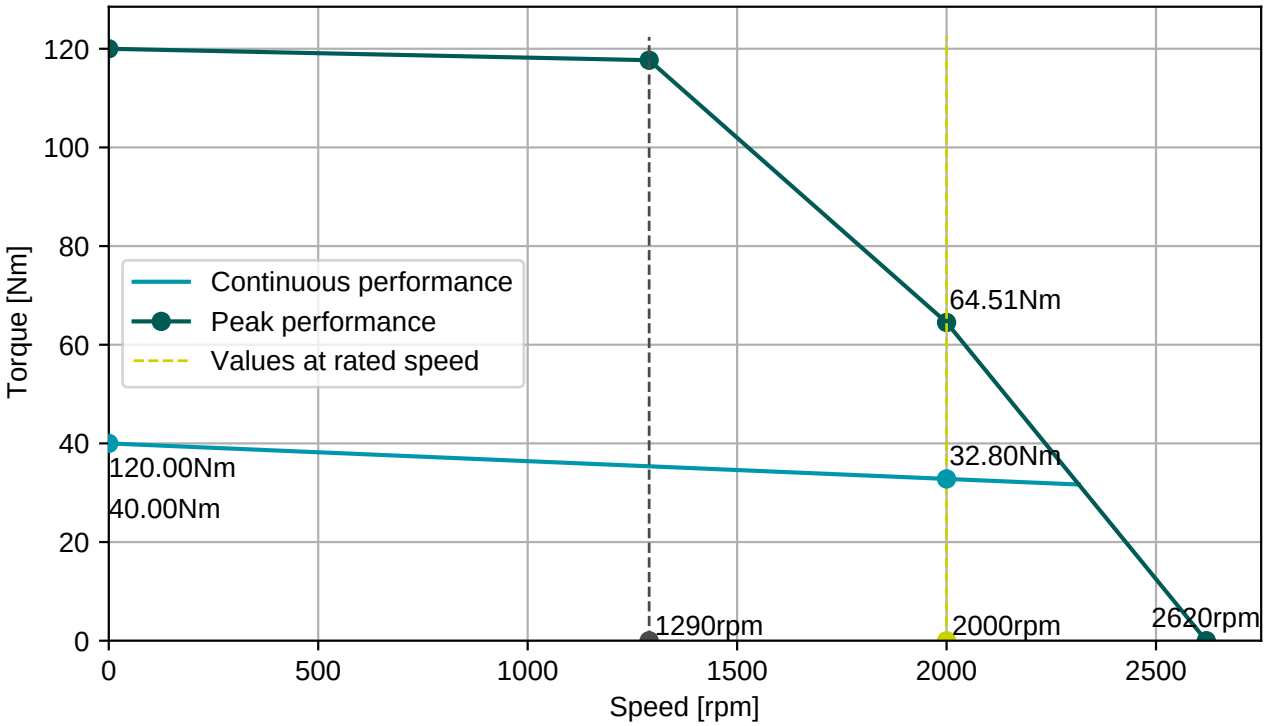


**BGC110N00001216000**

M23, 8 poles, rotary

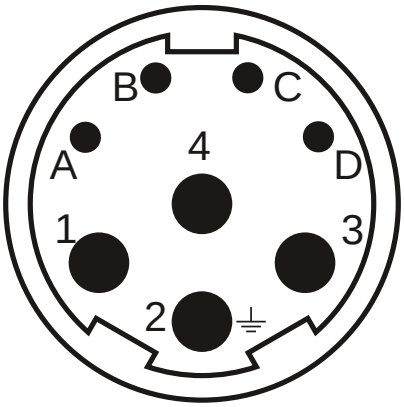


| Connector 1 (283) | |
|---|---|
| **1** | U |
| **4** | V |
| **3** | W |
| **2** | PE |
| **A** | Brake+ |
| **B** | Brake- |
| **C** | GND/DSL- |
| **D** | +Us/DSL+ |

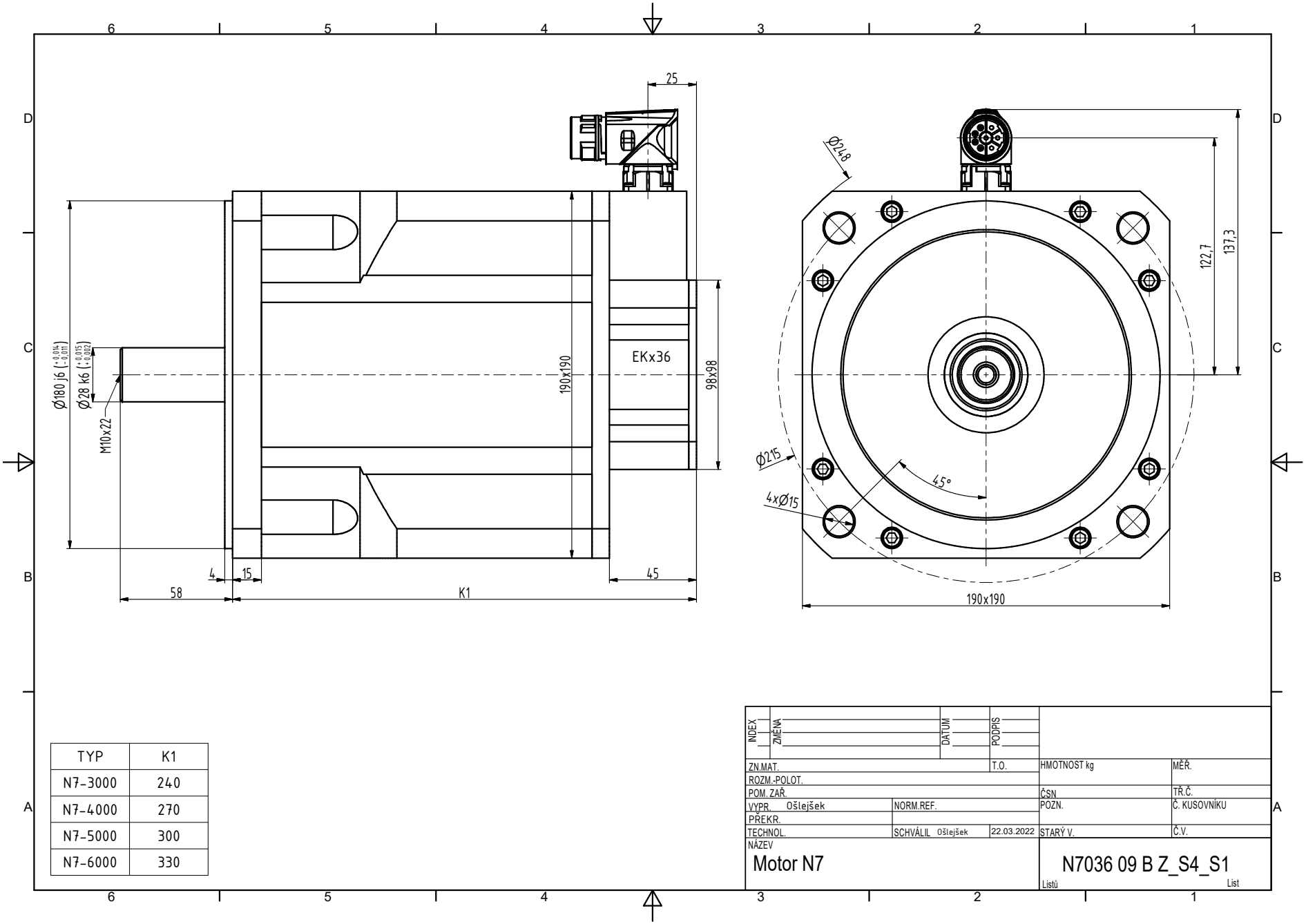


| TYP | K1 |
|---|---|
| N7-3000 | 240 |
| N7-4000 | 270 |
| N7-5000 | 300 |
| N7-6000 | 330 |

| INDEX | ZMĚNA | DATUM | PODPIS |
|---|---|---|---|
| | | | |

| | | | | | |
|---|---|---|---|---|---|
| ZN.MAT. | | T.O. | HMOTNOST kg | MĚŘ. | |
| ROZM.-POLOT. | | | | | |
| POM. ZAŘ. | | | ČSN | TŘ.Č. | |
| VYPR. Ošlejšek | NORM.REF. | | POZN. | Č. KUSOVNÍKU | |
| PŘEKR. | | | | | |
| TECHNOL. | SCHVÁLIL Ošlejšek | 22.03.2022 | STARÝ V. | Č.V. | |

NÁZEV

Motor N7

N7036 09 B Z_S4_S1

Listů List