Engineering data (WIN 833)		
DC bus voltage	560	V DC
Nominal AC voltage	380	V AC (rms)
Rated voltage	257	V AC (rms)
Rated power	7.9	kW
Rated speed	3000	rpm
Rated torque	25.00	Nm
Rated current	20.1	A (rms)
Peak torque	120	Nm
Peak current	90.2	A (rms)
Stall torque	40	Nm
Stall current	26.3	A (rms)
No load speed	4130	rpm
EMF constant ±10%	92	V AC (rms) / 1000rpm
Theoretical torque constant ±10%	1.52	Nm / A (rms)
Torque constant ±10% @ rated load	1.24	Nm / A (rms)
Number of poles	10	
Electrical time constant	18.24	ms
Winding terminal resistance	0.17	Ω
Rotary field terminal inductance	3.1	mH

Customs info	
HS Code	85015230

Mechanical data (setting 48)		
Max mechanical speed	6000	rpm
Mech. time constant	0.88	ms
Thermal time constant	90	min
Rotor inertia	69	kgcm²
Protection	IP64	
Color	RAL 9005	
Cooling	Convection	
Motor-only mass	23.2	kg
Max. axial force 20kh	263	N
Max. radial force 20kh*	1384	N
Max. axial force 100kh	154	N
Max. radial force 100kh*	810	N

** Defined for point of action at ½ output shaft length*

Sensors	
Temperature	PT1000 {PT1000}
Feedback	EDM35 (HDSL) multi-turn, 20+12 bits

Brake		
Braking torque	36.00	Nm
Voltage	24	V DC
Power @20°C	26.0	W
Current @20°C	1.08	A
Inertia	6.20	kgcm²
Mass	2.85	kg

Torque / speed curve

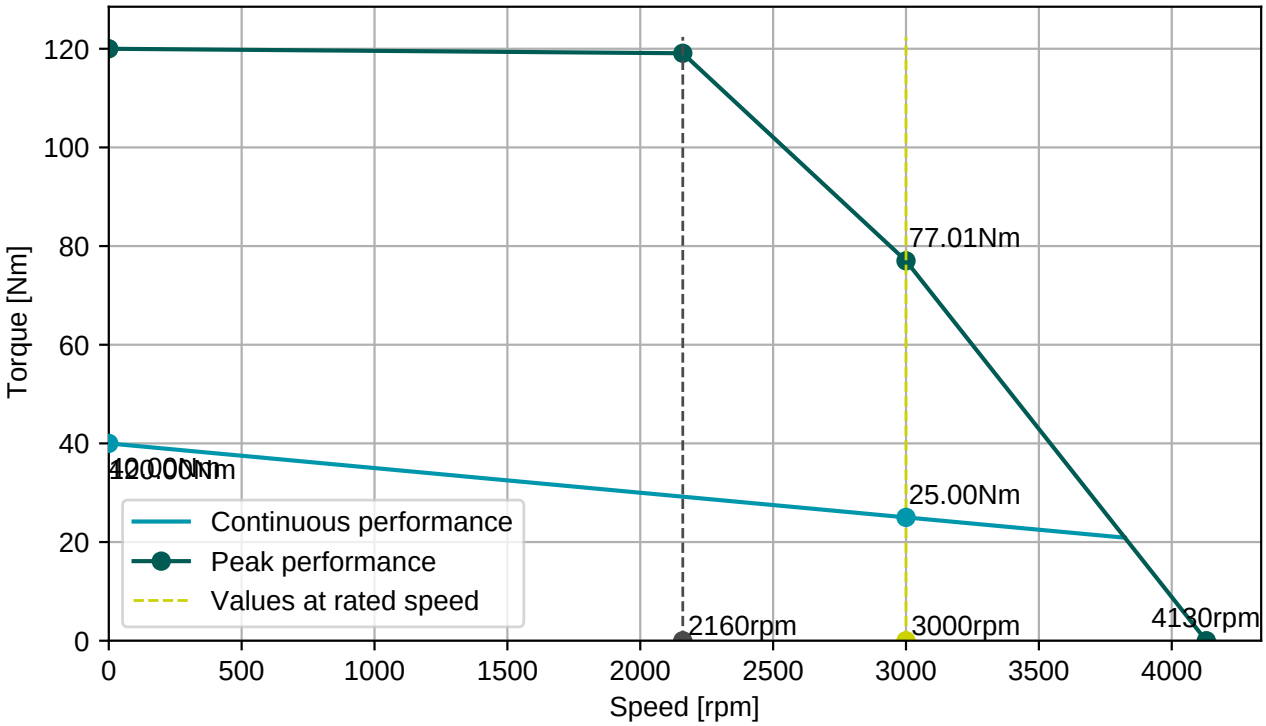

BGC110N00001216000

M23, 8 poles, rotary

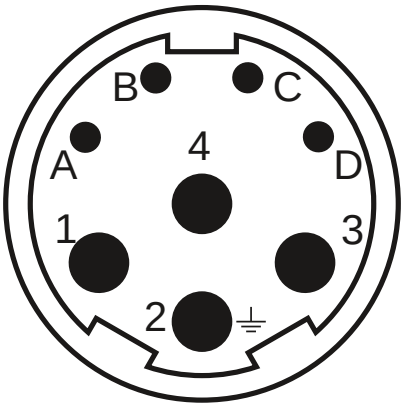

Connector 1 (283)	
1	U
4	V
3	W
2	PE
A	Brake+
B	Brake-
C	GND/DSL-
D	+Us/DSL+

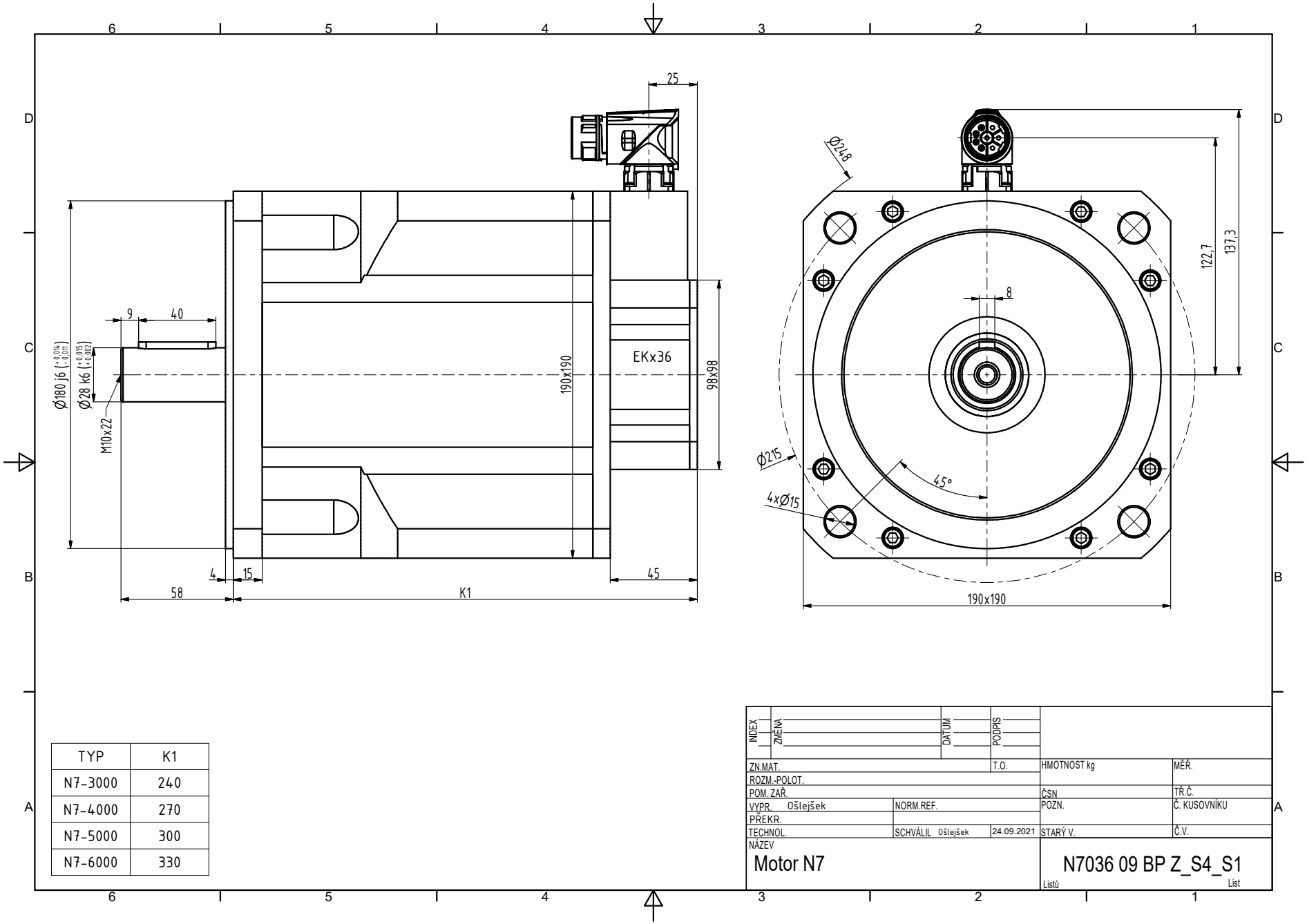

TYP	K1
N7-3000	240
N7-4000	270
N7-5000	300
N7-6000	330

INDEX	ZMĚNA	DATUM	PODPIS

ZN.MAT.			T.O.	HMOTNOST kg	MĚŘ.
ROZM.-POLOT.					
POM. ZAŘ.				ČSN	TŘ.Č.
VYPR. Ošlejšek	NORM.REF.			POZN.	Č. KUSOVNÍKU
PŘEKR.					
TECHNOL.	SCHVÁLIL Ošlejšek	24.09.2021		STARÝ V.	Č.V.

NÁZEV
Motor N7

N7036 09 BP Z_S4_S1

Listů List