Engineering data (WIN 1165)		
DC bus voltage	560	V DC
Nominal AC voltage	380	V AC (rms)
Rated voltage	349	V AC (rms)
Rated power	8.6	kW
Rated speed	3000	rpm
Rated torque	27.30	Nm
Rated current	16.18	A (rms)
Peak torque	180	Nm
Peak current	101.8	A (rms)
Stall torque	60	Nm
Stall current	30	A (rms)
No load speed	3140	rpm
EMF constant ±10%	125	V AC (rms) / 1000rpm
Theoretical torque constant ±10%	2.067	Nm / A (rms)
Torque constant ±10% @ rated load	1.687	Nm / A (rms)
Number of poles	10	
Electrical time constant	18.75	ms
Winding terminal resistance	0.16	Ω
Rotary field terminal inductance	3	mH

Customs info	
HS Code	85015230

Mechanical data (setting 48)		
Max mechanical speed	6000	rpm
Mech. time constant	0.69	ms
Thermal time constant	108	min
Rotor inertia	107	kgcm²
Protection	IP64	
Color	RAL 9005	
Cooling	Convection	
Motor-only mass	24	kg
Max. axial force 20kh	264	N
Max. radial force 20kh*	1388	N
Max. axial force 100kh	154	N
Max. radial force 100kh*	811	N

** Defined for point of action at ½ output shaft length*

Sensors	
Temperature	PT1000 {PT1000}
Feedback	EKM36 (HDSL) multi-turn, 18+12 bits, SIL2

Torque / speed curve

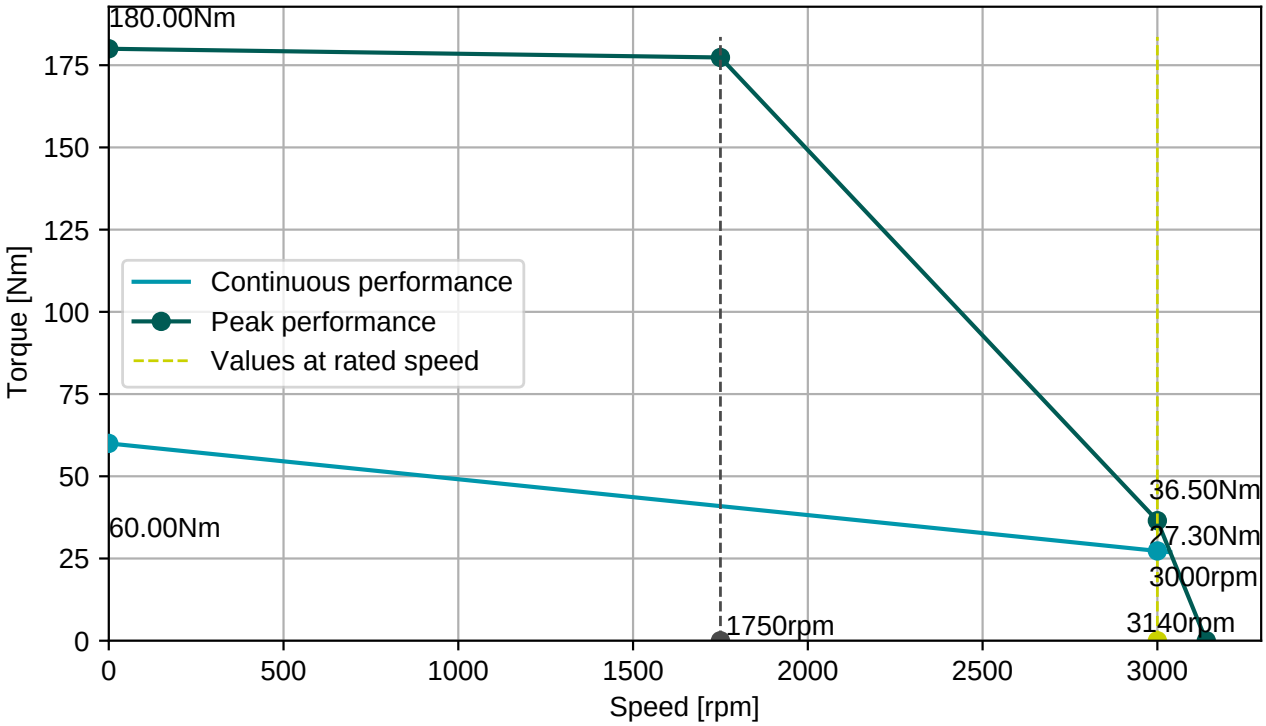

BGC110N00001216000

M23, 8 poles, rotary

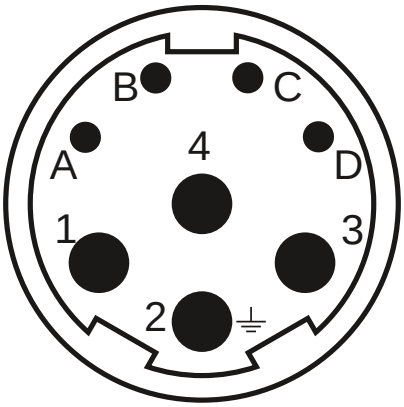

Connector 1 (283)	
1	U
4	V
3	W
2	PE
A	Brake+
B	Brake-
C	GND/DSL-
D	+Us/DSL+

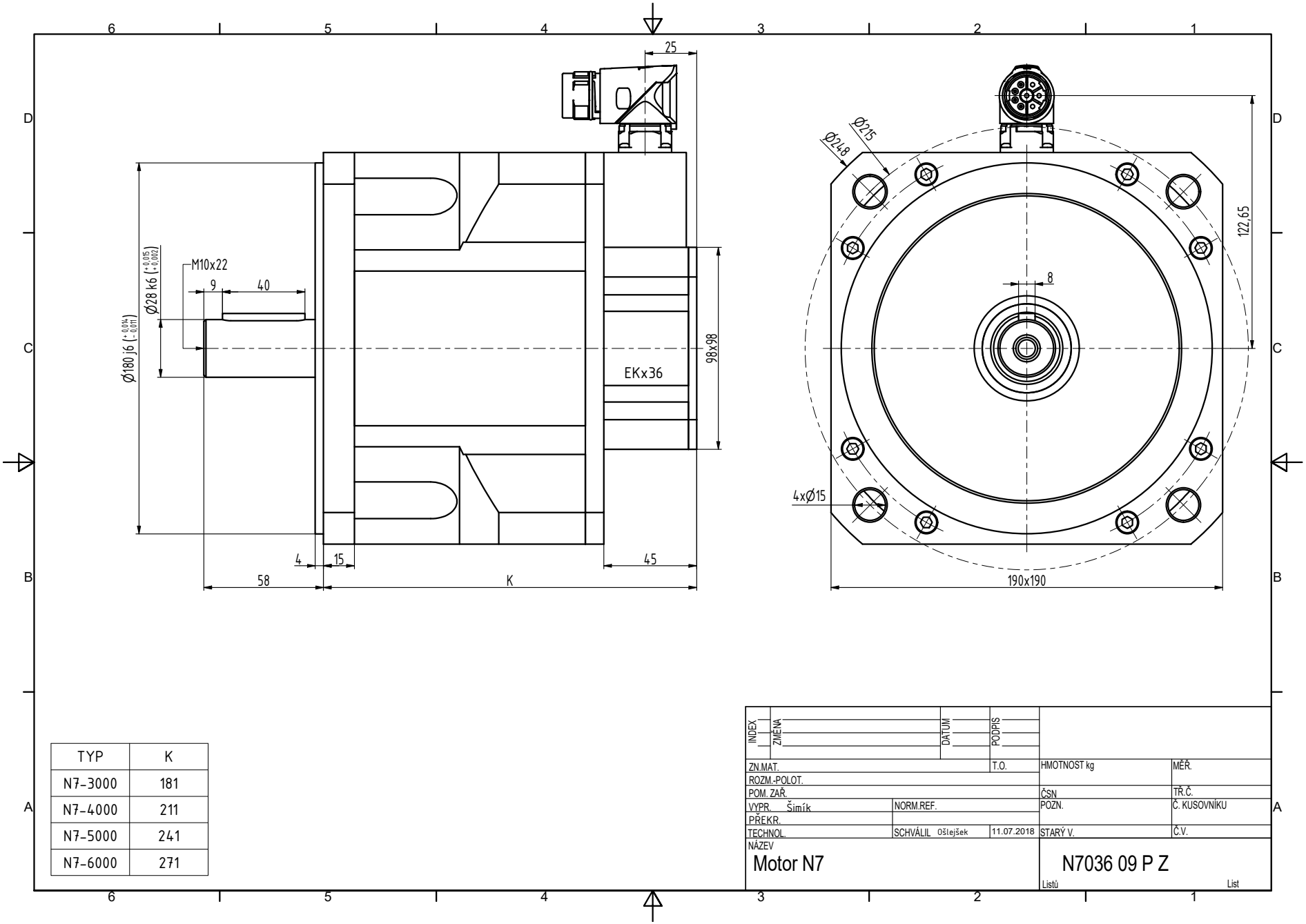

TYP	K
N7-3000	181
N7-4000	211
N7-5000	241
N7-6000	271

INDEX	ZMĚNA	DATUM	PODPIS		
ZN.MAT.			T.O.	HMOTNOST kg	MĚŘ.
ROZM.-POLOT.					
POM. ZAŘ.				ČSN	TŘ.Č.
VYPR. Šimík		NORM.REF.		POZN.	Č. KUSOVNÍKU
PŘEKR.					
TECHNOL.		SCHVÁLIL Ošlejšek	11.07.2018	STARÝ V.	Č.V.
NÁZEV	Motor N7			N7036 09 P Z	
				Listů	List