Engineering data (WIN 1068)		
DC bus voltage	560	V DC
Nominal AC voltage	380	V AC (rms)
Rated voltage	308	V AC (rms)
Rated power	7.6	kW
Rated speed	2000	rpm
Rated torque	36.50	Nm
Rated current	17.31	A (rms)
Peak torque	132	Nm
Peak current	63.7	A (rms)
Stall torque	44	Nm
Stall current	17.7	A (rms)
No load speed	2530	rpm
EMF constant ±10%	154	V AC (rms) / 1000rpm
Theoretical torque constant ±10%	2.547	Nm / A (rms)
Torque constant ±10% @ rated load	2.109	Nm / A (rms)
Number of poles	10	
Electrical time constant	14.29	ms
Winding terminal resistance	0.49	Ω
Rotary field terminal inductance	7	mH

Customs info	
HS Code	85015230

Mechanical data (setting 48)		
Max mechanical speed	6000	rpm
Mech. time constant	0.61	ms
Thermal time constant	62	min
Rotor inertia	47	kgcm²
Protection	IP64	
Color	RAL 9005	
Cooling	Convection	
Motor-only mass	13.8	kg
Max. axial force 20kh	165	N
Max. radial force 20kh*	871	N
Max. axial force 100kh	97	N
Max. radial force 100kh*	509	N

** Defined for point of action at ½ output shaft length*

Sensors	
Temperature	PT1000 {PT1000}
Feedback	EKS36 (HDSL) single-turn, 18 bits, SIL2

Torque / speed curve

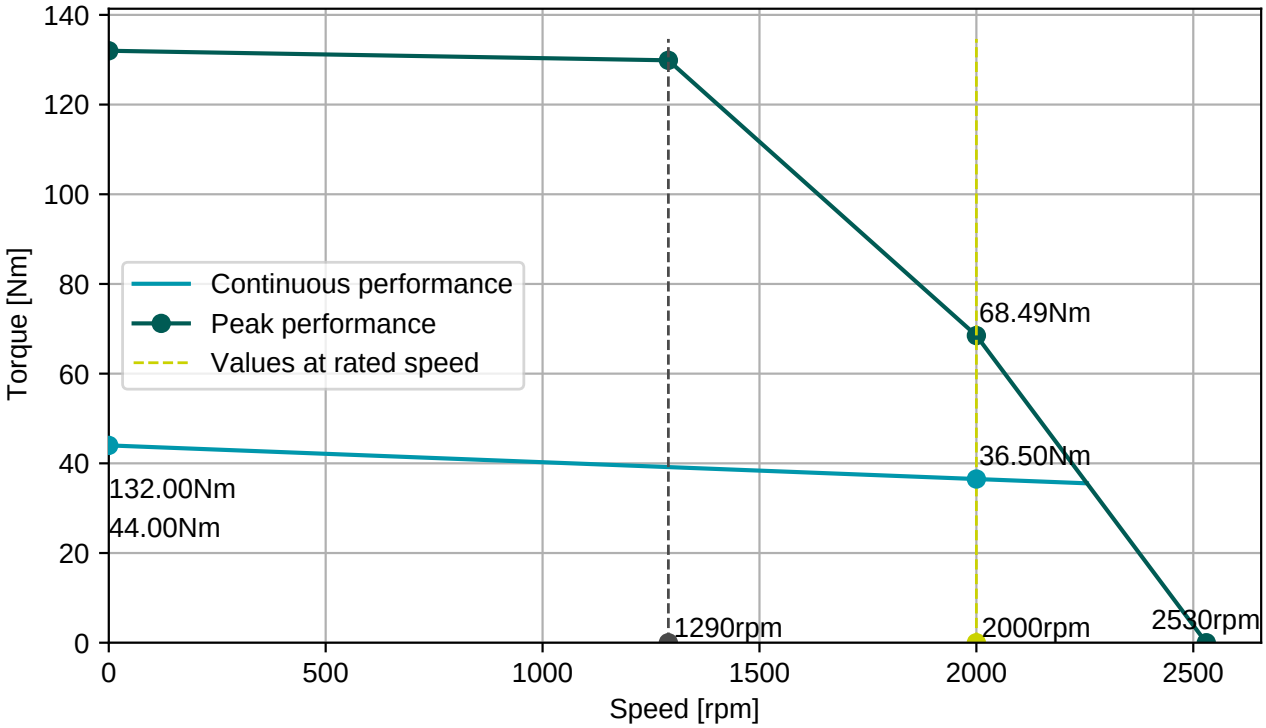

BGC110N00001216000

M23, 8 poles, rotary

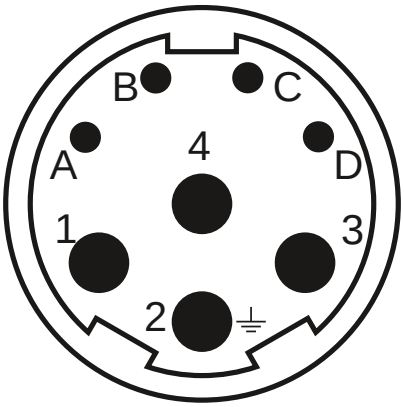

Connector 1 (283)	
1	U
4	V
3	W
2	PE
A	Brake+
B	Brake-
C	GND/DSL-
D	+Us/DSL+

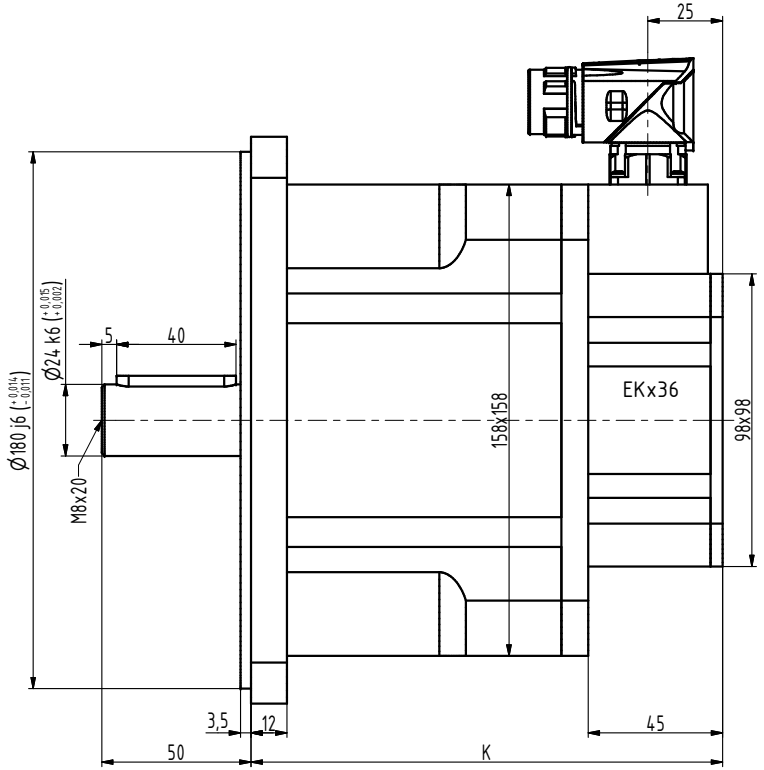

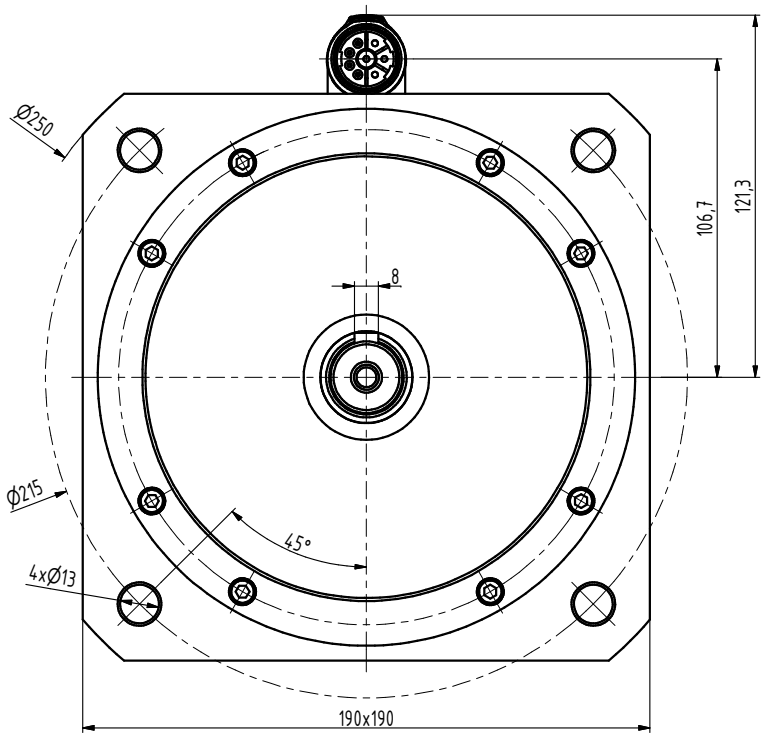

TYP	K
N6-1800	158
N6-2400	183
N6-3000	208
N6-3800	233
N6-4400	258

INDEX	ZMĚNA	DATUM	PODPIS

ZN.MAT.		T.O.	HMOTNOST kg	MĚŘ.
ROZM.-POLOT.				
POM. ZAŘ.			ČSN	TŘ.Č.
VYPR. Ošlejšek	NORM.REF.		POZN.	Č. KUSOVNÍKU
PŘEKR.				
TECHNOL.	SCHVÁLIL Ošlejšek	20.09.2021	STARÝ V.	Č.V.

NÁZEV

Motor N6

N6028 04 P Z_S4_S1

Listů List